RA series

SPEC. SHEET

REMOTE I/O (Thermocouple input)

Model: **RAE**

■ Model

RAE – □

Power supply
0: 100 to 240V AC
1: 24V AC/DC

■ How to order

Specify a model.
(e.g.) RAE-0

Default value

Input	K -200 to 1370℃
Communication protocol	Private protocol

■ Input specifications

Thermocouple
Input resistance : 1MΩ or more
External resistance: 100Ω or less, however, B: 40Ω or less
Burnout : Upscale, Downscale
Input:

Thermocouple	Input range	
K	-200 to 1370℃	-328 to 2498℉
J	-200 to 1000℃	-328 to 1832℉
R	-50 to 1760℃	-58 to 3200℉
S	-50 to 1760℃	-58 to 3200℉
B	0 to 1820℃	32 to 3308℉
E	-200 to 800℃	-328 to 1472℉
T	-200 to 400℃	-328 to 752℉
N	-200 to 1300℃	-328 to 2372℉
PL-Ⅱ	0 to 1390℃	32 to 2534℉
W5Re/W26Re	0 to 2315℃	32 to 4199℉
W3Re/W25Re	0 to 2315℃	32 to 4199℉

Minimum span: 50℃ (100℉)

■ Communication

Communication line : EIA RS-485
Communication method : Half-duplex communication
Synchronization method: Start-stop synchronization
Communication speed : 2400, 4800, 9600, 19200bps
Parity : Even, Odd, No parity
Stop bit : 1, 2
Communication protocol: Private protocol, Modbus ASCII, Modbus RTU

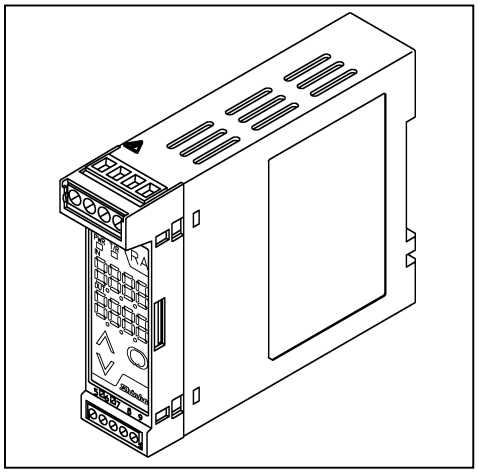

■ Performance

Conversion accuracy:
Within ±0.1% of each input span
R, S inputs, -50 to 200℃ (-58 to 392℉):
Within ±6℃ (12℉)
B input, 0 to 300℃ (32 to 572℉):
Accuracy is not guaranteed.
K, J, E, T, N inputs, Less than 0℃(32℉):
Within ±0.4% of each input span
Cold junction compensation accuracy:
Within ±1℃ at -5 to 55℃
Display accuracy:
Within conversion accuracy ±1 digit
Conversion speed: 250ms
Temperature coefficient: ±0.015%/℃
Insulation resistance: 10MΩ or more, at 500V DC
(Input - Communication - Power)
Dielectric strength : 2.0kV AC for 1 minute:
(Input - Communication - Power)

■ General structure

Case : Flame-resistant resin Color: Light gray
Front panel: Membrane sheet
Communication section: Modular jack
Setting : By the front keypad
Indication : Input display:
7-segment, Red LED display 4-digit
Character size, 7.4 x 4.0mm (H x W)
Input % display:
7-segment, Green LED display 4-digit
Character size, 7.4 x 4.0mm (H x W)
Power indicator: Green LED
Communication indicator: Yellow LED

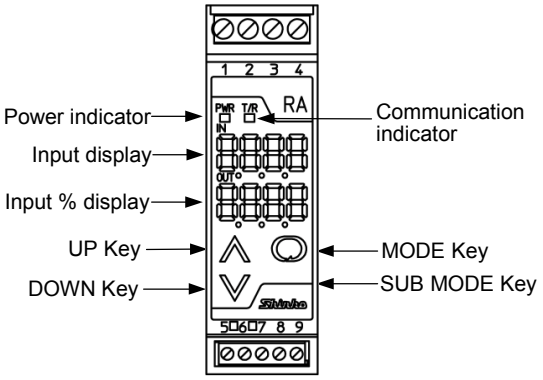

■ Installation specifications

Power supply : 100 to 240V AC 50/60Hz
24V AC/DC 50/60Hz
Allowable voltage range: 85 to 264V AC
20 to 28V AC/DC
Power consumption : Approx. 6VA
Ambient temperature : -5 to 55℃
Ambient humidity : 35 to 85%RH (non-condensing)
Weight : Approx. 120g
Mounting : DIN rail mounting
External dimensions : 22.5 (W) x 75 (H) x 100 (D)mm

■ Attached functions

Power failure countermeasure:
The data is backed up in non-volatile IC memory.
Self diagnosis:
The CPU is monitored by a watchdog timer, and when an abnormal status is found on the CPU, the unit is switched to warm-up status.
Cold junction compensation: Built-in

■ Environmental specification

RoHS directive compliance

■ Settings

Function keys
(1) UP Key : Increases the numeric value.
(2) DOWN Key : Decreases the numeric value.
(3) MODE Key : Selects the setting mode.
(4) SUB MODE Key: Press with the MODE Key to select the setting mode.

Setting items
Set by the MODE Key and SUB MODE Key
(1) Set value lock
(2) Input range
(3) Decimal point place
(4) 0% value
(5) 100% value
(6) Filter time constant
(7) Sensor correction
(8) Burnout selection
(9) Display selection
(10) Indication time

Set by the UP Key and MODE Key
(1) Communication protocol
(2) Instrument number
(3) Communication speed
(4) Parity
(5) Stop bit

■ Displays and indicators

Input display : Indicates the input value.
Indication of -200.0 or less (ranges with decimal point):
The minus (-) sign and input value light in turn.
Under range: " - - - - " flashes on the Input display.
Over range : " " flashes on the Input display.
Warm-up indication:
For approx. 3 seconds after the power to the instrument is turned on, the input type is indicated on the Input display.
Input % display : Indicates the input value in percentage (%) form.
Power indicator : The green LED lights when the power to the instrument is turned on.
Communication indicator: The yellow LED lights when sending data (TX output).

■ Ferrules

Terminals from 1 to 4
Insulation sleeve attached (Phoenix Contact GMBH & CO.)
AI0.25-8YE 0.2 – 0.25mm^2
AI0.34-8TQ 0.25 – 0.34mm^2
AI0.5-8WH 0.34 – 0.5mm^2
AI0.75-8GY 0.5 – 0.75mm^2
AI1.0-8RD 0.75 –1.0mm^2
AI1.5-8BK 1.0 – 1.5mm^2
Crimping pliers (Phoenix Contact GMBH & CO.)
CRIMPFOX ZA3, CRIMPFOX UD6

Terminals from 5 to 9
Insulation sleeve attached (Phoenix Contact GMBH & CO.)
AI0.25-8YE 0.2 – 0.25mm^2
AI0.34-8TQ 0.25 – 0.34mm^2
AI0.5-8WH 0.34 – 0.5mm^2
Crimping pliers (Phoenix Contact GMBH & CO.)
CRIMPFOX ZA3, CRIMPFOX UD6

■ Circuit configuration, terminal arrangement

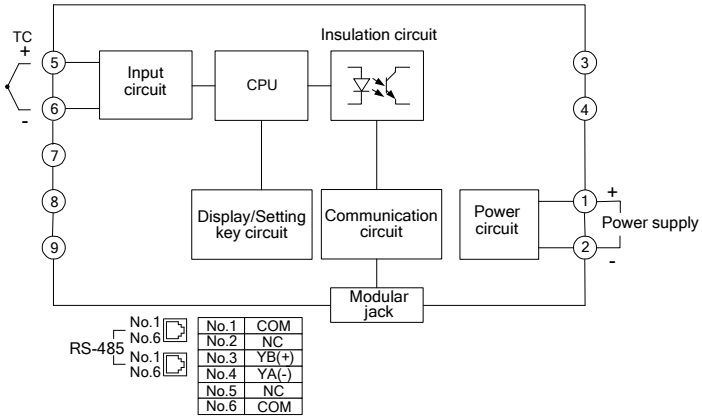
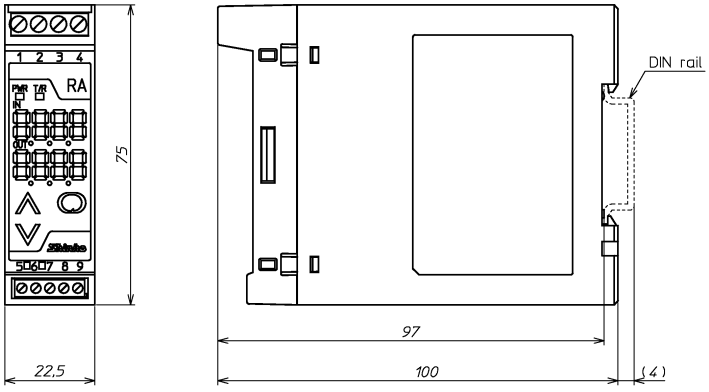
■ External dimensions (Scale: mm)