Control Module

QTC1-4

INSTRUCTION MANUAL

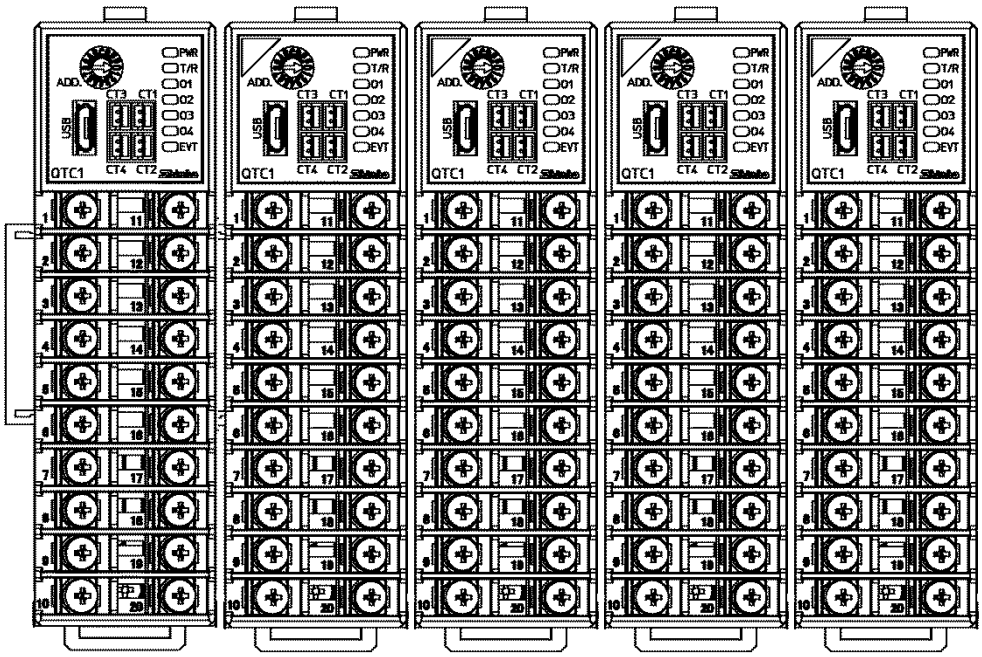

Shinko

Preface

Thank you for purchasing our control module [QTC1-4].
This manual contains instructions for the mounting, functions, operations and notes when operating the control module [QTC1-4].
To prevent accidents arising from the misuse of this instrument, please ensure the operator receives this manual

Notes

- This instrument should be used in accordance with the specifications described in the manual.
  If it is not used according to the specifications, it may malfunction or cause a fire.
- Be sure to follow the warnings, cautions and notices. If they are not observed, serious injury or malfunction may occur.
- The contents of this instruction manual are subject to change without notice.
- Care has been taken to ensure that the contents of this instruction manual are correct, but if there are any doubts, mistakes or questions, please inform our sales department.
- This instrument is designed to be installed on a DIN rail within a control panel. If it is not, measures must be taken to ensure that the operator does not touch power terminals or other high voltage sections.
- Any unauthorized transfer or copying of this document, in part or in whole, is prohibited.
- Shinko Technos Co., Ltd. is not liable for any damage or secondary damage(s) incurred as a result of using this product, including any indirect damage.

SAFETY PRECAUTIONS (Be sure to read these precautions before using our products.)

The safety precautions are classified into categories: “Warning” and “Caution”.
Depending on circumstances, procedures indicated by ⚠ Caution may result in serious consequences, so be sure to follow the directions for usage.

⚠ **Warning**	Procedures which may lead to dangerous conditions and cause death or serious injury, if not carried out properly.
⚠ **Caution**	Procedures which may lead to dangerous conditions and cause superficial to medium injury or physical damage or may degrade or damage the product, if not carried out properly.

⚠ Warning

- To prevent an electrical shock or fire, only Shinko or qualified service personnel may handle the inner assembly.
- To prevent an electrical shock, fire, or damage to instrument, parts replacement may only be undertaken by Shinko or qualified service personnel.

⚠ Safety Precautions

- To ensure safe and correct use, thoroughly read and understand this manual before using this instrument.
- This instrument is intended to be used for industrial machinery, machine tools and measuring equipment. Verify correct usage after purpose-of-use consultation with our agency or main office. (Never use this instrument for medical purposes with which human lives are involved.)
- External protection devices such as protective equipment against excessive temperature rise, etc. must be installed, as malfunction of this product could result in serious damage to the system or injury to personnel. Proper periodic maintenance is also required.
- This instrument must be used under the conditions and environment described in this manual.
  Shinko Technos Co., Ltd. does not accept liability for any injury, loss of life or damage occurring due to the instrument being used under conditions not otherwise stated in this manual.

⚠ Caution with Respect to Export Trade Control Ordinance

To avoid this instrument from being used as a component in, or as being utilized in the manufacture of weapons of mass destruction (i.e. military applications, military equipment, etc.), please investigate the end users and the final use of this instrument.
In the case of resale, ensure that this instrument is not illegally exported.

Precautions for Use

1. Installation Precautions

⚠ Caution

This instrument is intended to be used under the following environmental conditions (IEC61010-1):

- Overvoltage category , Pollution degree 2

Ensure the mounting location corresponds to the following conditions:

- A minimum of dust, and an absence of corrosive gases
- No flammable, explosive gases
- No mechanical vibrations or shocks
- No exposure to direct sunlight, an ambient temperature of -10 to 55°C(14°F to 131°F) that does not change rapidly, and no icing
- An ambient non-condensing humidity of 35 to 85 %RH
- No large capacity electromagnetic switches or cables through which large current is flowing
- No water, oil or chemicals or the vapors of these substances can come into direct contact with the unit.
- When installing this unit within a control panel, please note that ambient temperature of this unit – not the ambient temperature of the control panel – must not exceed 55°C (131°F).
  Otherwise the life of electronic components (especially electrolytic capacitor) may be shortened.

* Avoid setting this instrument directly on or near flammable material even though the case of this instrument is made of flame-resistant resin.

2. Wiring Precautions

⚠ Caution

- Do not connect two or more control module QTC1-4P (with power supply / communication option) in one unit.
- Do not leave bits of wire in the instrument, because they could cause a fire and malfunction.
- When wiring, use a crimping pliers and a solderless terminal with an insulation sleeve in which an M3 screw fits.
- The terminal block of this instrument has a structure that is wired from the left side.
  Be sure to insert the lead wire into the terminal of the instrument from the left side and tighten the terminal screw.
- Tighten the terminal screw using the specified torque. If excessive force is applied to the screw when tightening, the screw or case may be damaged.
- Do not pull or bend the lead wire with the terminal as the base point during or after wiring work.
  It may cause malfunction.
- This instrument does not have a built-in power switch, circuit breaker and fuse. It is necessary to install a power switch, circuit breaker and fuse near the instrument.
  (Recommended fuse: Time-lag fuse, rated voltage 250 V AC, rated current 2 A)
- When wiring the power supply (24 VDC), do not confuse the polarities.
- Do not apply a commercial power source to the sensor which is connected to the input terminal nor allow the power source to come into contact with the sensor.
- Use the thermocouple and compensation lead wire that match the sensor input specifications of the instrument.
- Use a RTD of 3-conducting wire type that meets the sensor input specifications of this instrument.
- When using a relay contact output type, externally use a relay according to the capacity of the load to protect the built-in relay contact.
- Separate the input line (thermocouple, RTD, etc.) from the power line and load line.

3. Operation and Maintenance Precautions

⚠ Caution

- It is recommended that auto-tuning (AT) be performed on the trial run.
- Do not touch live terminals. This may cause electrical shock or problems in operation.
- Turn the power supply to the instrument OFF when retightening the terminal or cleaning.
  Working on or touching the terminal with the power switched ON may result in severe injury or death due to electrical shock.
- Use a soft, dry cloth when cleaning the instrument.
  (Alcohol based substances may tarnish or deface the unit.)
- As the display section is vulnerable, be careful not to put pressure on, scratch or strike it with a hard object.

The following abbreviations are used in the text, figures, and tables of this manual.

Symbol	Term
PV	Process variable (PV)
SV	Desired value (SV)
MV	Output manipulated variable (MV)
AT	Auto-tuning (AT)
CT	Current transformer (CT) [for heater burnout alarm (option)]

About description of reference page

In the case of "Refer to 2-2.", it is described as (2-2).

Contents

1 Overview

1.1 Overview of Control Module QTC1-4

This instrument is a control module that can be 4ch controlled.

A multi-point control system can be configured with the control module alone, or via a host computer or PLC.

A maximum of 16 instruments can be connected via BUS, and a maximum of 64 points can be controlled.

One block connected to BUS is called "1 unit".

In addition, a maximum of 16 units can be connected using the communication expansion module QMC1 and a maximum of 1024 points can be controlled.

1.2 Description of Module

4ch control module.

Terminal block type, input and output are 4ch individual.

The following options are available:

- Power supply / communication option
- Heater burnout alarm option
- Event input/output option

Depending on whether have the option, the front design differs.

QTC1-40T-□□□□□□□□-0□
No options

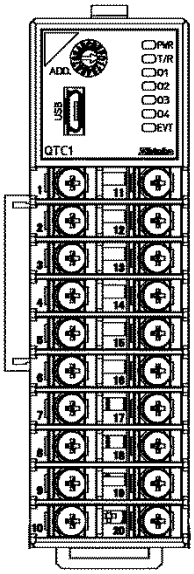

(Fig. 1.2-1)

QTC1-40T-□□□□□□□□-2□ , QTC1-40T-□□□□□□□□-A□
With heater burnout alarm option

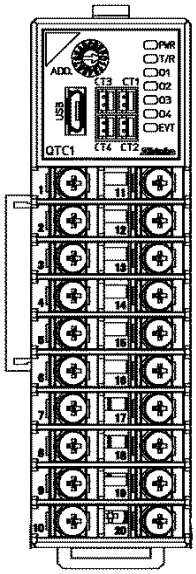

(Fig. 1.2-2)

QTC1-4PT-□□□□□□□□-0□
With power supply / communication options

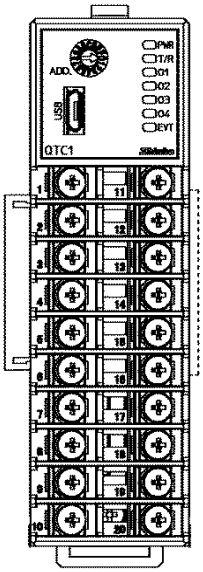

(Fig. 1.2-3)

QTC1-4PT-□□□□□□□□-2□ , QTC1-4PT-□□□□□□□□-A□
With power supply / communication option and heater burnout alarm option

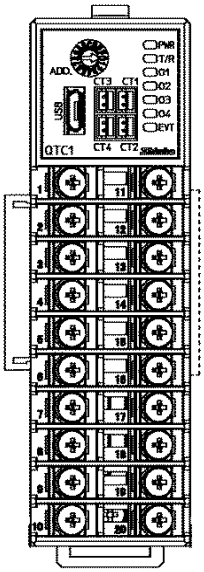

(Fig. 1.2-4)

1.3 System Configuration

1.3.1 Using Control Module Alone

⚠ Caution

Do not connect two or more control module QTC1-4P (with power supply / communication option) in one unit.

When using the control module alone, one control module QTC1-4P (with power supply / communication option) is required for connecting to the power line.
The second and subsequent power lines to the control module are BUS-connected by the connector.
For the second and subsequent control modules, use the control module QTC1-40(no power supply / communication option).
Maximum of 16 control modules can be connected.

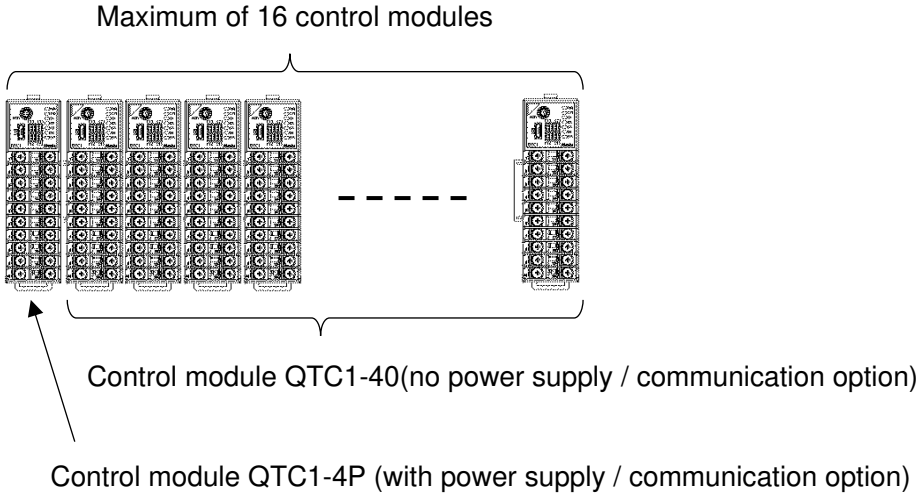

(Fig. 1.3.1-1)

1.3.2 Connecting to Host Computer

⚠ Caution

Do not connect two or more control module QTC1-4P (with power supply / communication option) in one unit.

When connecting to the host computer, one control module QTC1-4P (with power supply / communication option) is required for host communication.
The second and subsequent power lines to the control module are BUS-connected by the connector.
For the second and subsequent control modules, use the control module QTC1-40(no power supply / communication option).
Maximum of 16 control modules can be connected.

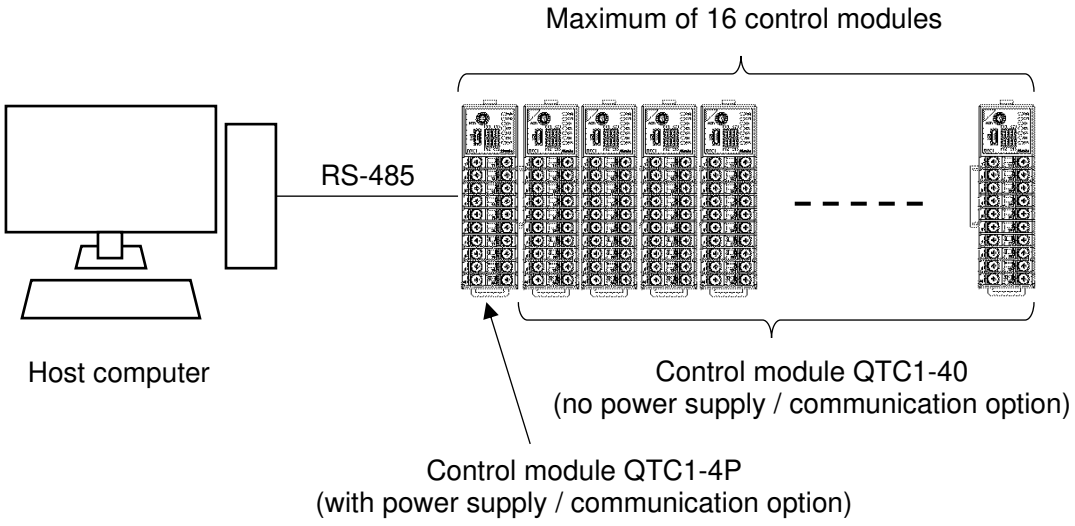

(Fig. 1.3.2-1)

A maximum of 16 units can be connected by connecting the communication expansion module QMC1s.

Refer to communication expansion module QMC1 instruction manual for detail.

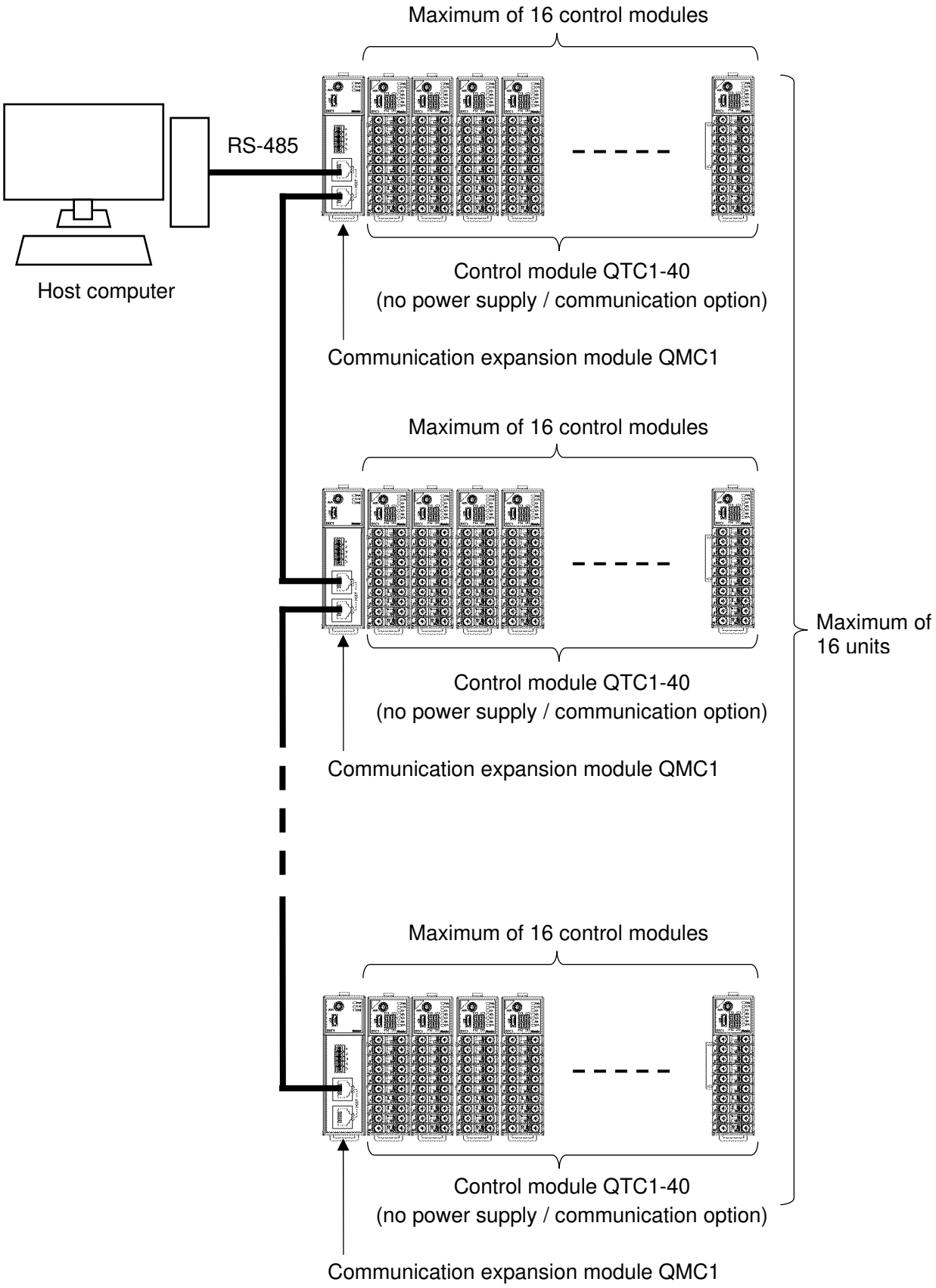

(Fig. 1.3.2-2)

1.3.3 Connecting to PLC

(1) When connecting to MELSEC Q, QnA series by Mitsubishi Electric Corporation

⚠ Caution

Do not connect two or more control module QTC1-4P (with power supply / communication option) in one unit.

When connecting to the MELSEC Q, QnA series by Mitsubishi Electric Corporation, one control module QTC1-4P (with power supply / communication option) is required for upper communication.

Use the SIF function (Smart InterFace, programless communication function) (13-1).

The second and subsequent power lines to the control module are BUS-connected by the connector.

For the second and subsequent control modules, use the control module QTC1-40(no power supply / communication option).

Maximum of 16 control modules can be connected.

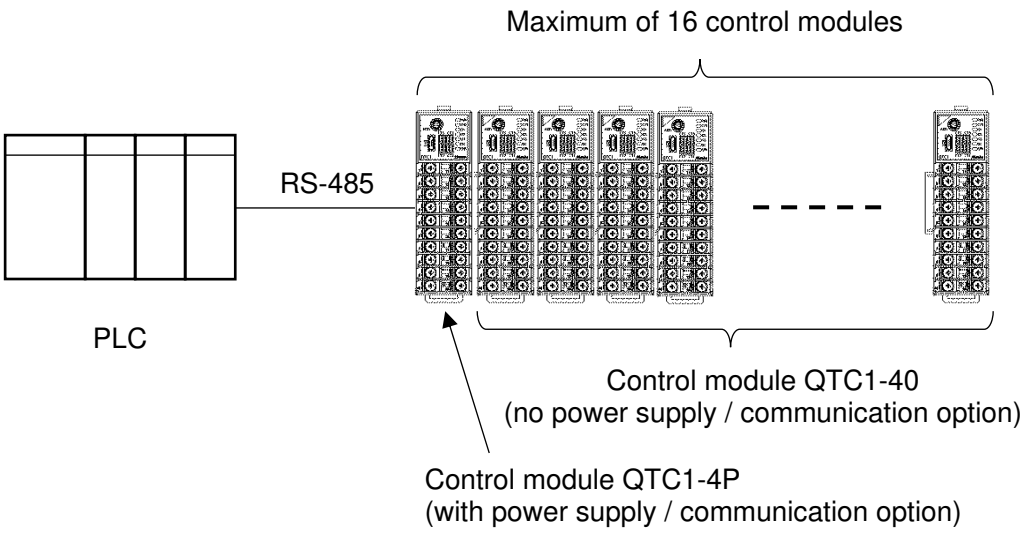

(Fig. 1.3.3-1)

(2) When connecting to MELSEC series by Mitsubishi Electric Corporation, SYSMAC series by OMRON Corporation and KV series by KEYENCE CORPORATION

⚠ Caution

Do not connect the control module QTC1-4P (with power supply / communication option) in one unit, when using the communication expansion module QMC1.

When connecting to the MELSEC series by Mitsubishi Electric Corporation, SYSMAC series by OMRON Corporation and KV series by KEYENCE CORPORATION, one communication expansion module QMC1 is required for upper communication per unit.
The power lines to the control module are BUS-connected by the connector.
Use the control module QTC1-40(no power supply / communication option).
Maximum of 16 control modules can be connected.

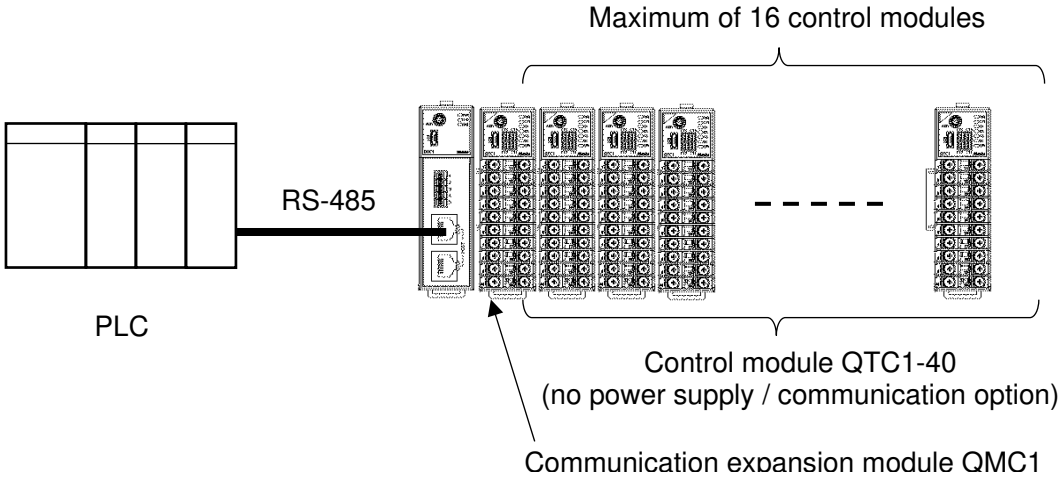

(Fig. 1.3.3-2)

A maximum of 16 units can be connected by connecting the communication expansion module QMC1s.

Refer to communication expansion module QMC1 instruction manual for detail.

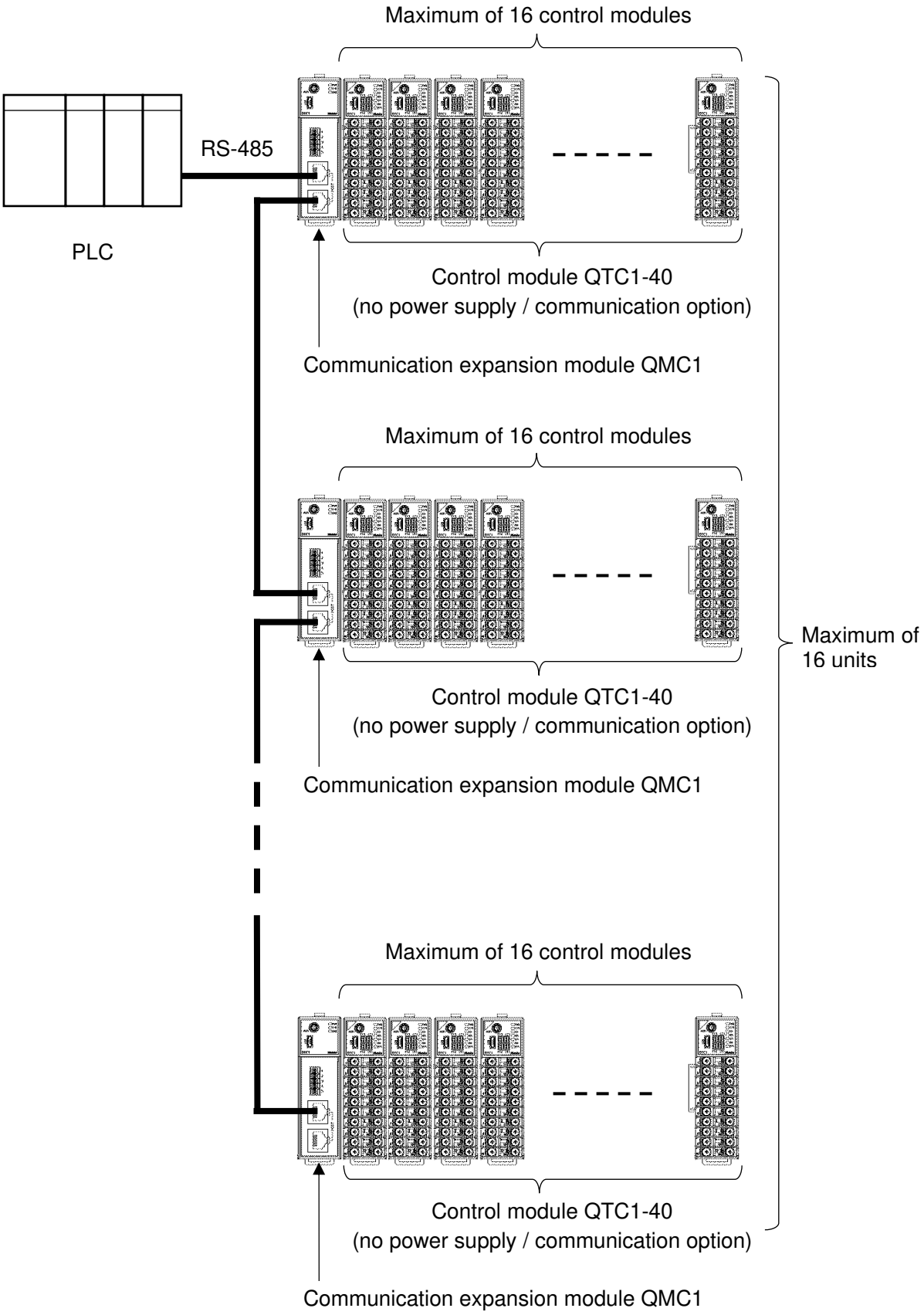

(Fig. 1.3.3-3)

1.4 Parameter Passing

1.4.1 Using the Control Module QTC1-4P (with power supply / communication option)

When the control module QTC1-4P (with power supply / communication option) is used, the parameter passing is as shown below.

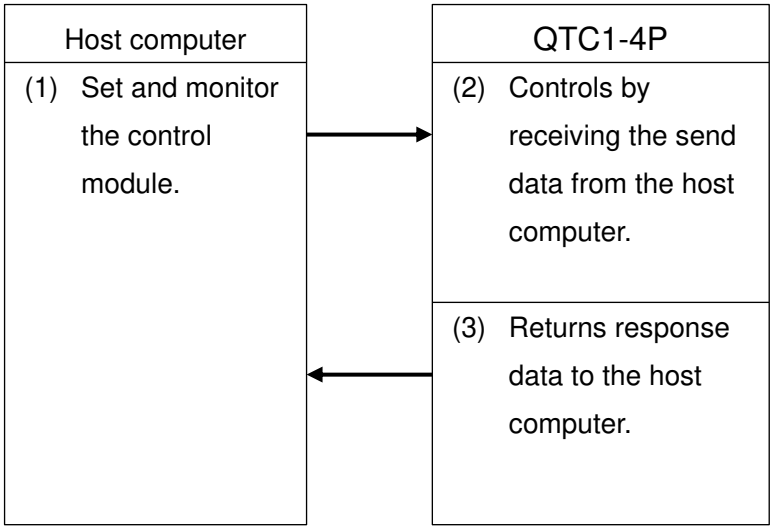

(Fig. 1.4.1-1)

1.4.2 Using the Communication Expansion Module QMC1

When the communication expansion module QMC1 is used, the parameter passing is as shown below.

Refer to the communication expansion module QMC1 instruction manual for detail.

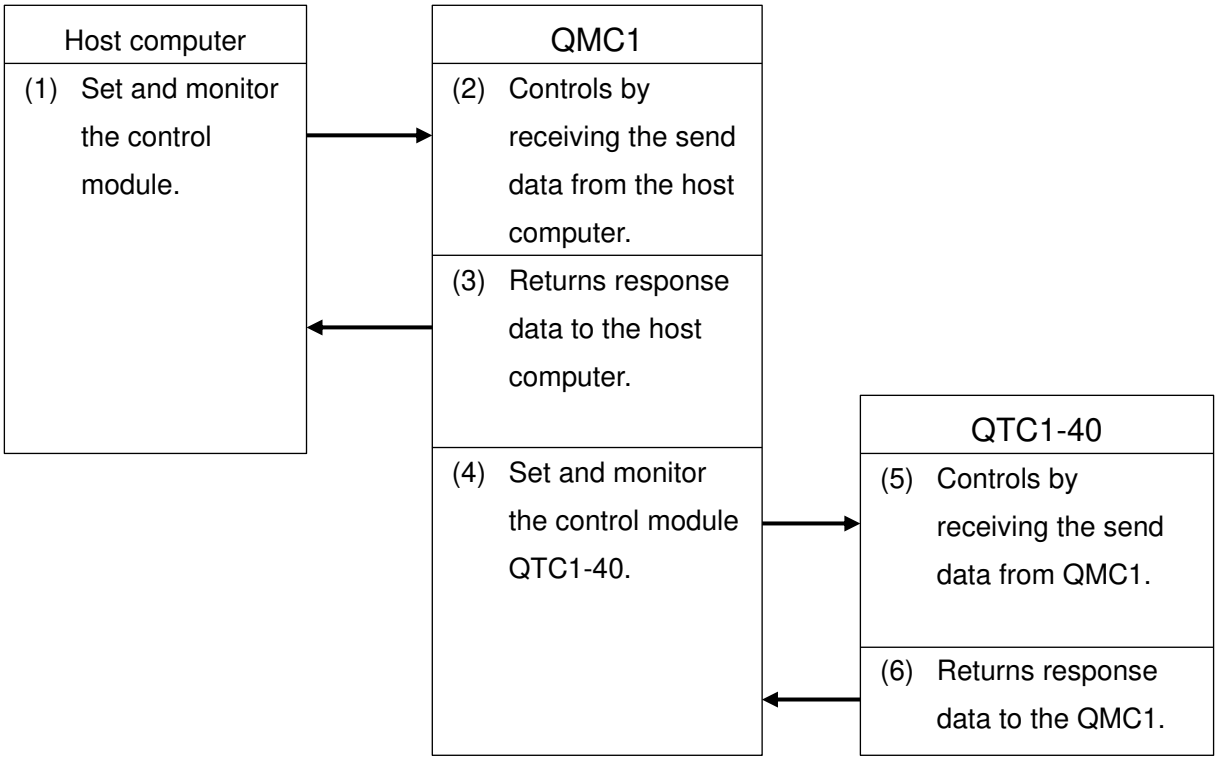

(Fig. 1.4.2-1)

2 Model

2.1 Model

QTC1-4	□	□	-□	□	□	□	□	□	□	□	-□	□	
Power supply / communication option	0												No option
	P												With power supply / communication option
Wiring type		T											Terminal block type
CH1 Control output			-□										Refer to output code table
CH2 Control output				□									
CH3 Control output					□								
CH4 Control output						□							
CH1 Input							□						Refer to input code table (2-2)
CH2 Input								□					
CH3 Input									□				
CH4 Input										□			
Heater burnout alarm option											-0		No option
											-2		CT 4 points 20 A (*1)
											-A		CT 4 points 100 A (*1)
Event input/output option												0	No option
												1	Event input (4 points) (*2)
												2	Event output (4 points) (*2)

(*1): CT and connector harness are sold separately.

(*2): Connector harness is sold separately.

Output code table

Output code	Output type
R	Relay contact output
S	Non-contact voltage output (For SSR drive)
A	DC current output 4 to 20 mA DC
0	DC current output 0 to 20 mA DC
V	DC voltage output 0 to 1 V DC
1	DC voltage output 0 to 5 V DC
2	DC voltage output 1 to 5 V DC
3	DC voltage output 0 to 10 V DC
C	Open collector output
T	Triac output

Input code table

Input code	Input type		Range
M	Thermocouple input	K	-200 to 1370 °C
		K	-200.0 to 400.0 °C
		J	-200 to 1000 °C
		R	0 to 1760 °C
		S	0 to 1760 °C
		B	0 to 1820 °C
		E	-200 to 800 °C
		T	-200.0 to 400.0 °C
		N	-200 to 1300 °C
		PL-Ⅱ	0 to 1390 °C
		C (W/Re5-26)	0 to 2315 °C
		K	-328 to 2498 °F
		K	-328.0 to 752.0 °F
		J	-328 to 1832 °F
		R	32 to 3200 °F
		S	32 to 3200 °F
		B	32 to 3308 °F
		E	-328 to 1472 °F
		T	-328.0 to 752.0 °F
		N	-328 to 2372 °F
		PL-Ⅱ	32 to 2534 °F
		C (W/Re5-26)	32 to 4199 °F
	RTD input	Pt100	-200.0 to 850.0 °C
		Pt100	-328.0 to 1562.0 °F
	DC voltage input	0 to 1 V DC	-2000 to 10000
	DC current input	4 to 20 mA DC	-2000 to 10000
		0 to 20 mA DC	-2000 to 10000
A	DC current input	4 to 20 mA DC (Built-in receiving resistor)	-2000 to 10000
		0 to 20 mA DC (Built-in receiving resistor)	-2000 to 10000
V	DC voltage input	0 to 5 V DC	-2000 to 10000
		1 to 5 V DC	-2000 to 10000
		0 to 10 V DC	-2000 to 10000

2.2 How to Read the Model Label

The model label is attached to the right side of this instrument.

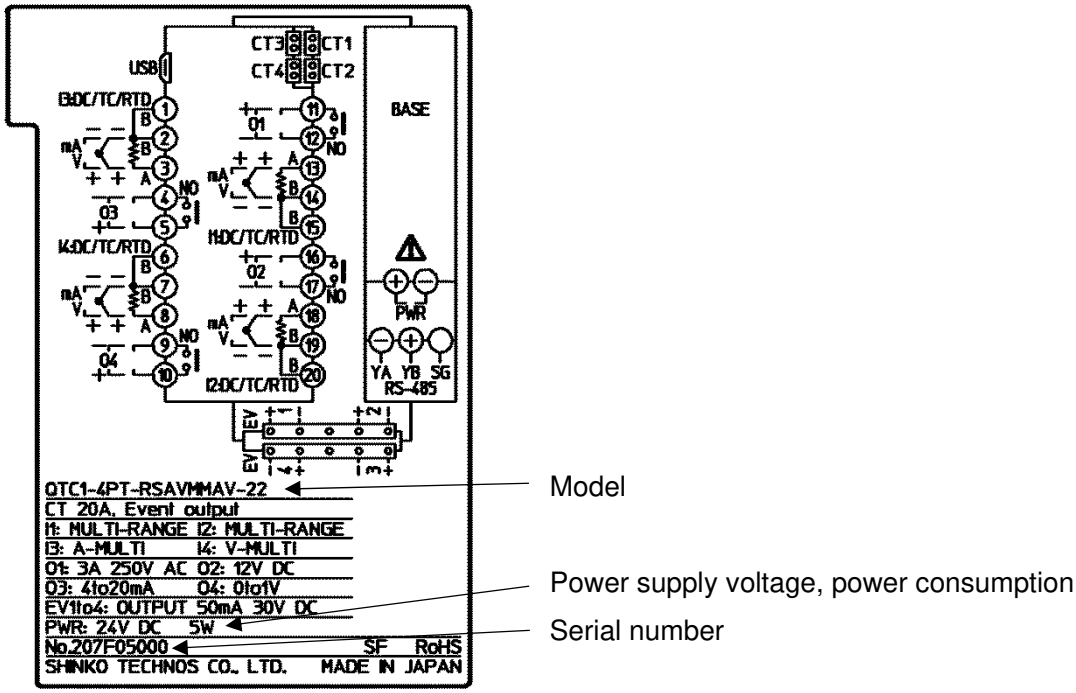

(Fig. 2.2-1)

3 Name and Functions

3.1 Control Module QTC1-4

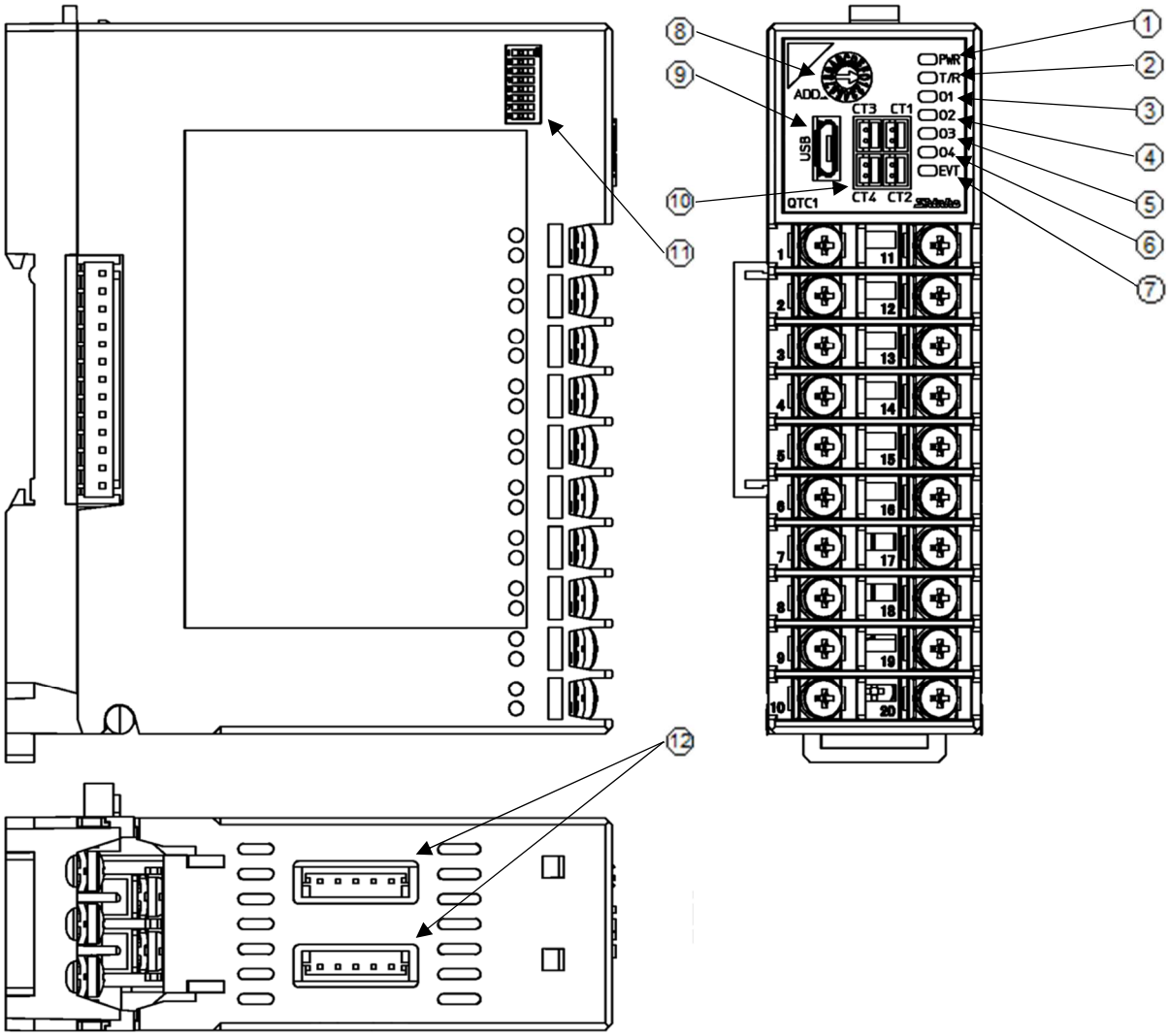

(Fig. 3.1-1)

Operation indicator

No.	Symbol (color)	Name and Function
①	PWR (Green)	Power indicator • Lights off (always): No power supply to the instrumen • Lights up (always): Power supply to the instrumen • Flashing for 500 ms (3 seconds): Warming up the instrument • Flashing for 500 ms (always): Internal failure of the instrument [When non-volatile IC memory error or ADC (internal circuit) error]
②	T/R (Yellow)	Communication indicator • Lights off (always): Communication error (no response) or USB communication • Flashing (slow): Communication error (reception error) • Flashing (fast): Communication is normal
③	O1 (Green)	CH1 control output indicator • Lights off: CH1 control output is OFF or control is prohibited • Lights up: CH1 control output is ON (other than DC current output and DC voltage output) • Flashing: CH1 control output is ON (DC current output, DC voltage output)
④	O2 (Green)	CH2 control output indicator • Lights off: CH2 control output is OFF or control is prohibited • Lights up: CH2 control output is ON (other than DC current output and DC voltage output) • Flashing: CH2 control output is ON (DC current output, DC voltage output)
⑤	O3 (Green)	CH3 control output indicator • Lights off: CH3 control output is OFF or control is prohibited • Lights up: CH3 control output is ON (other than DC current output and DC voltage output) • Flashing: CH3 control output is ON (DC current output, DC voltage output)
⑥	O4 (Green)	CH4 control output indicator • Lights off: CH4 control output is OFF or control is prohibited • Lights up: CH4 control output is ON (other than DC current output and DC voltage output) • Flashing: CH4 control output is ON (DC current output, DC voltage output)
⑦	EVT (Red)	Event indicator • Lights off (always): No alarm or abnormality • Lights up (always): Alarm, loop abnormality alarm or heater burnout alarm (option) is activated • Flashing for 500 ms: Sensor error (overscale, underscale) • Flashing for 250 ms: Sensor error (input disconnection) or power is supplied from the computer by USB bus power

Switch and connnector

No.	Symbol	Name and Function
⑧	ADD.	Module address selection rotary switch Rotary switch for module address selection. The module address is the value of the selected rotary switch plus one.
⑨	USB	Console communication connector Connector for console communication tool cable.
⑩	CT1	CH1 CT input connector Connector for heater burnout alarm CT input of CH1.
	CT2	CH2 CT input connector Connector for heater burnout alarm CT input of CH2.
	CT3	CH3 CT input connector Connector for heater burnout alarm CT input of CH3.
	CT4	CH4 CT input connector Connector for heater burnout alarm CT input of CH4.
⑪		Communication specification selection dip switch DIP switch for selecting communication specifications. Select the communication specifications such as communication speed, data bit, parity, stop bit and communication protocol.
⑫		Event input/output connector Connector for ervent input or event output. Operation is selected by event input assignment selection or event output assignment selection.

4 Procedure Before Starting Operation

The procedure up to the start of operation when connecting to a host computer is shown below.

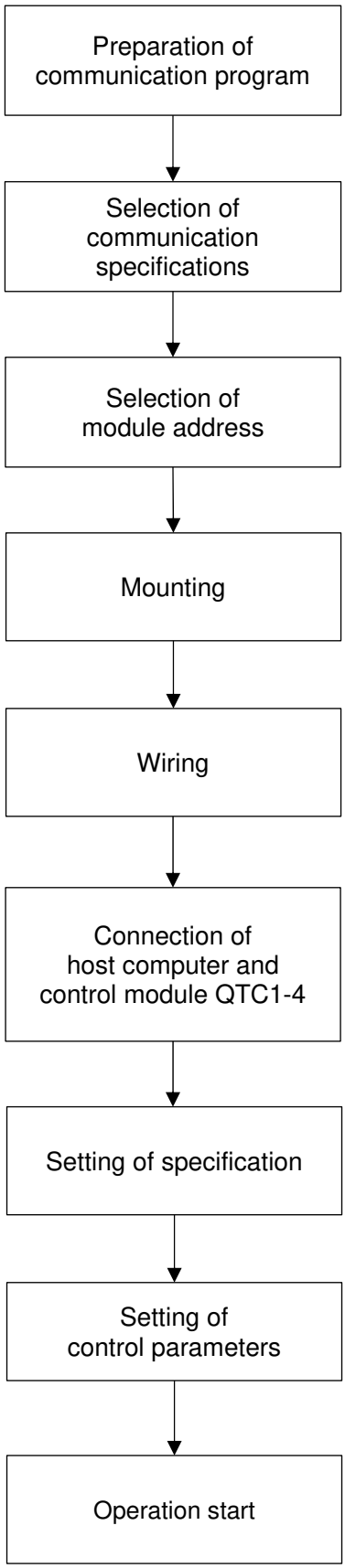

A communication program is required to connect and use the host computer.
Refer to “10 MODBUS Protocol (10-1 to 10-5)”, to create the communication program.

Select the communication specifications such as communication speed, data bit, and parity.
Refer to “5.1.1 Selection of Communication Specifications (5-1)”.

Select the module address.
Refer to “5.1.2 Selection of Module Address (5-3)”.

Mount the control module QTC1-4 to the DIN rail.
Refer to “6 Mounting (6-1)”.

Wire the control module QTC1-4.
Refer to “7 Wiring (7-1)”.

Connect the host computer and control module QTC1-4.
Refer to “7.5 Connection of Host Computer and Control Module QTC1-4 (7-8)”.

Set the specifications such as input parameters and output parameters.
Refer to “8 Setting of Specification (8-1 to 8-41)”.

Set the control parameters such as SV and alarm.
Refer to “11.1 Communication Command List (11-1 to 11-20)”.

Send the control enable command and start operation.
Refer to “12 Operation (12-1)”.

(Fig. 4-1)

5 Communication Parameter Setting

5.1 Communication Parameter Setting

5.1.1 Selection of Communication Specifications

Use the communication specification selection dip switch on the left side of the instrument to select communication specifications.

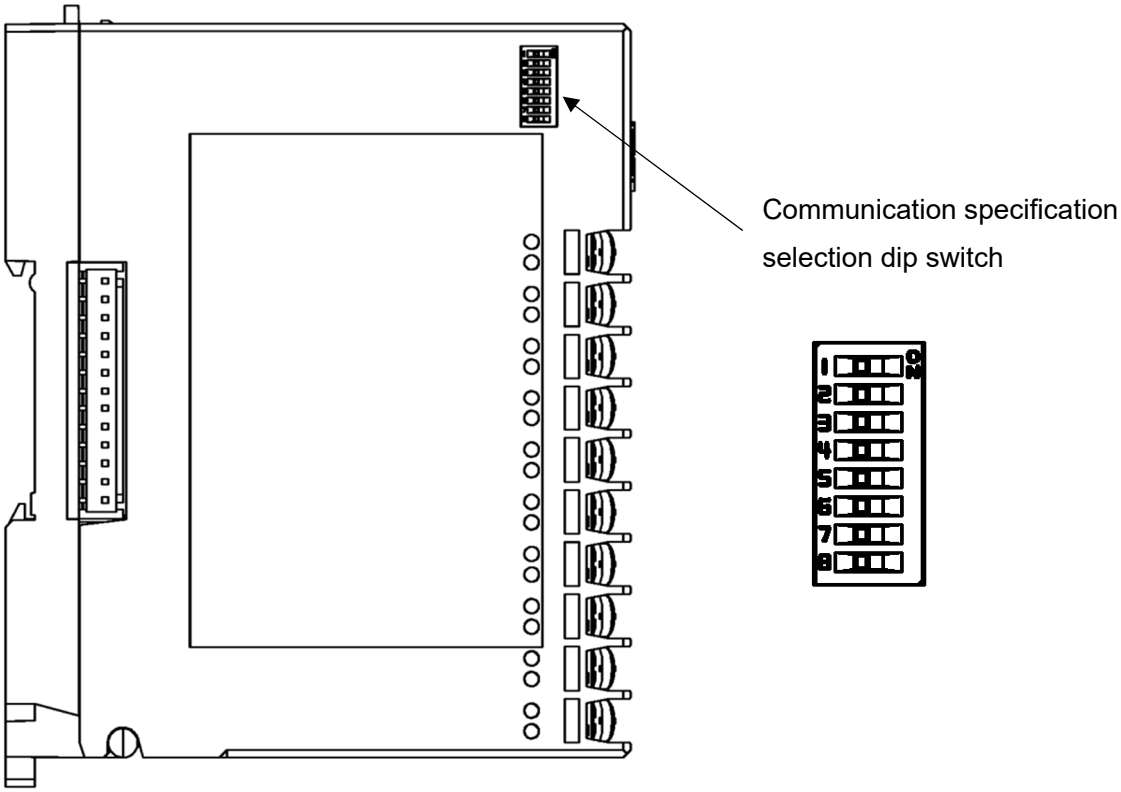

(Fig. 5.1.1-1)

Select the communication speed, data bit, parity, stop bit and communication protocol.
All are off when shipped from the factory.

- Communication speed: 57600 bps
- Data bit: 8 bits
- Parity: Even
- Stop bit: 1 bit
- Communication protocol: MODBUS specification

(1) Selection of communication speed

Communication specification selection dip switch		Communication speed
1	2	
OFF	OFF	57600 bps
ON	OFF	38400 bps
OFF	ON	19200 bps
ON	ON	9600 bps

(2) Selection of data bit, parity and stop bit

Communication specification selection dip switch			Data bit, parity and stop bit
3	4	5	
OFF	OFF	OFF	8 bits, Even, 1 bit
ON	OFF	OFF	8 bits, Even, 2 bits
OFF	ON	OFF	8 bits, Odd, 1 bit
ON	ON	OFF	8 bits, Odd, 2 bits
OFF	OFF	ON	8 bits, None, 1 bit
ON	OFF	ON	8 bits, None, 2 bits

(3) Selection of communication protocol

Communication specification selection dip switch	Communication protocol
6	
OFF	MODBUS specification
ON	SIF specification

Dip switches No.7 and No.8 does not use. Leave it OFF.

5.1.2 Selection of Module Address

⚠ Caution

When SIF specification is selected in "Selection of communication protocol (5-2)", select module addresses from 1 to consecutive numbers.
If select MODBUS specification, select any number from 0 to F (1 to 16).

The module address is selected with the rotary switch.

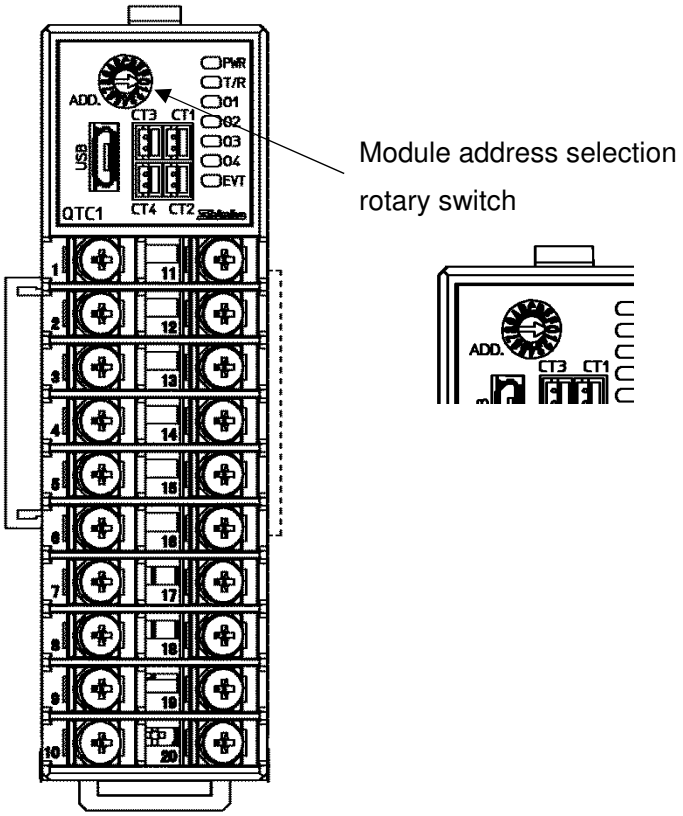

(Fig. 5.1.2-1)

Use a small flat blade screwdriver to select the module address.
The value obtained by adding 1 to the value of the selected rotary switch becomes the module address.

Module address: 0 to F (1 to 16)

Rotary switch	0	1		9	A	B		F
Module address	1	2		10	11	12		16

6 Mounting

⚠ Caution

- Do not connect two or more control module QTC1-4P (with power supply / communication option) in one unit.
- Mount the DIN rail horizontally.
- This instrument fits the following DIN rails.
  Top hat rail TH35 JIS C 2812-1988

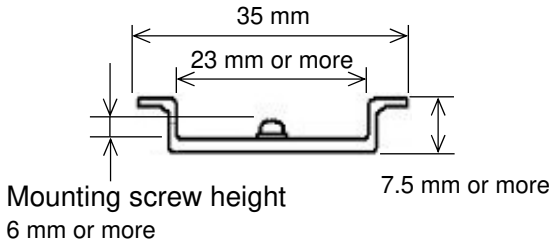

Width: 35 mm
Height: 7.5 mm or more
Groove width: 23 mm or more
DIN rail mounting screw height:
6 mm or more
(For DIN rail height 7.5 mm)

(Fig. 6-1)

- If this instrument is mounted in a position susceptible to vibration or shock, mount commercially available end plate at both ends of the instrument.
- When installing, make sure that the orientation (upper and lower) of this instrument is correct.
- When mounting or removing this instrument on the DIN rail, it must be tilted slightly
  Secure a space of 50 mm or more in the vertical direction of the instrument, considering the wiring space of the power supply/communication line and heat dissipation.

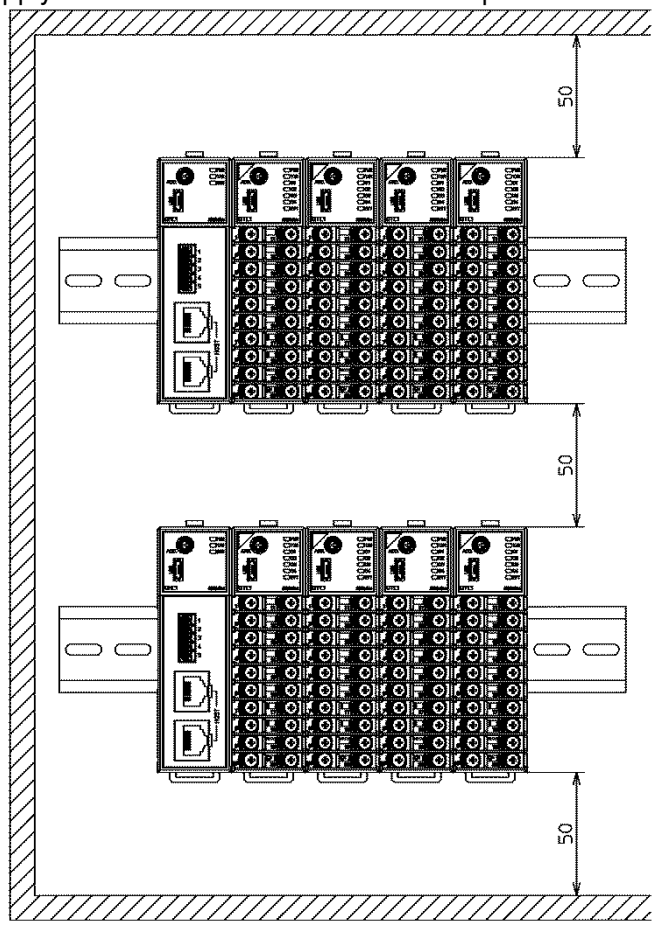

(Fig. 6-2)

6.1 Selection of Location

Ensure the mounting location corresponds to the following conditions:

- A minimum of dust, and an absence of corrosive gases
- No flammable, explosive gases
- No mechanical vibrations or shocks
- No exposure to direct sunlight, an ambient temperature of -10 to 55°C(14°F to 131°F) that does not change rapidly, and no icing
- An ambient non-condensing humidity of 35 to 85 %RH
- No large capacity electromagnetic switches or cables through which large current is flowing
- No water, oil or chemicals or the vapors of these substances can come into direct contact with the unit.
- When installing this unit within a control panel, please note that ambient temperature of this unit – not the ambient temperature of the control panel – must not exceed 55°C (131°F).
  Otherwise the life of electronic components (especially electrolytic capacitor) may be shortened.

* Avoid setting this instrument directly on or near flammable material even though the case of this instrument is made of flame-resistant resin.

6.2 External Dimensions (Scale: mm)

6.2.1 Control Module QTC1-4

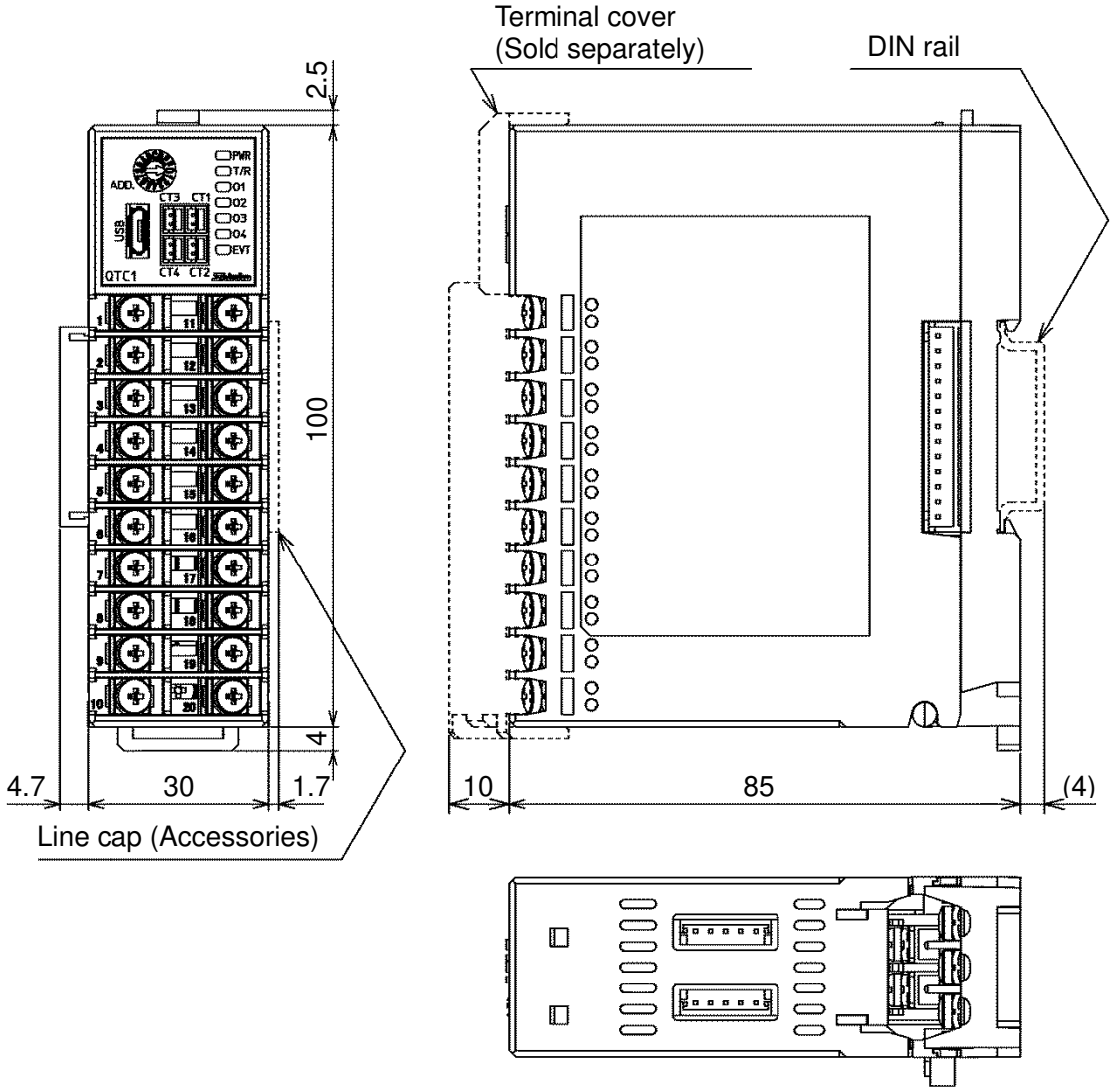

(Fig. 6.2.1-1)

6.2.2 CT (Current transformer)

CTL-6-S-H

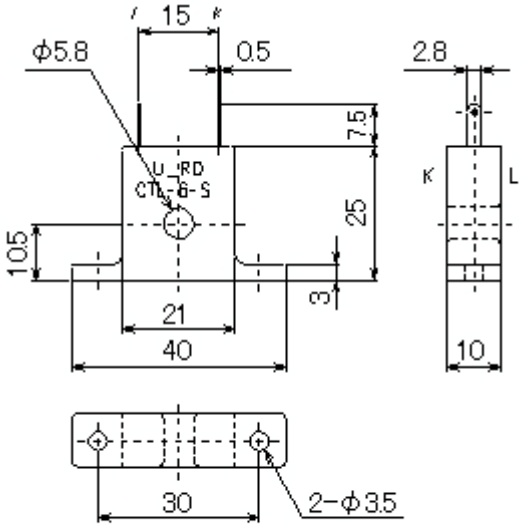

CTL-12-S36-10L1U

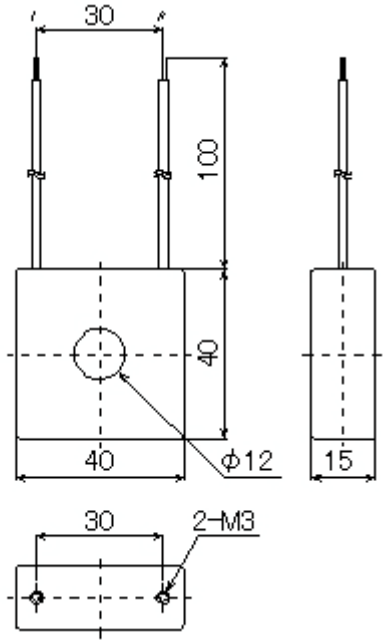

(Fig. 6.2.2-1)

6.3 Mounting

Mounting to the DIN rail

① Lower the lock lever of this instrument. (The lock lever of this instrument has a spring structure, but if lower it in the direction of the arrow until it stops, it will be locked in that position.)

② Hook the part ② of this instrument onto the top of the DIN rail.

③ Insert the lower part of this instrument with the part ② as a fulcrum.

④ Raise the lock lever of this instrument.
Make sure it is fixed to the DIN rail.

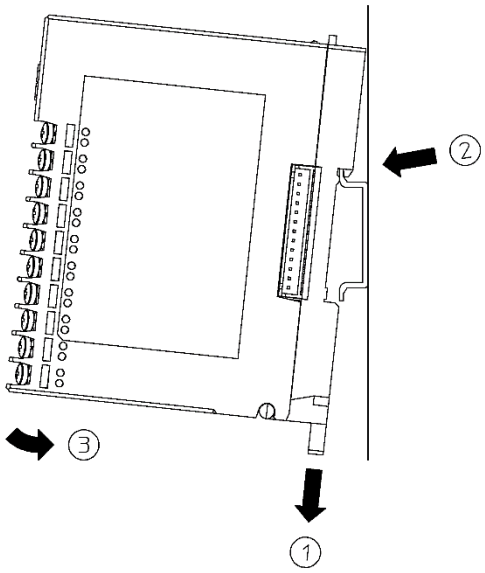

(Fig. 6.3-1)

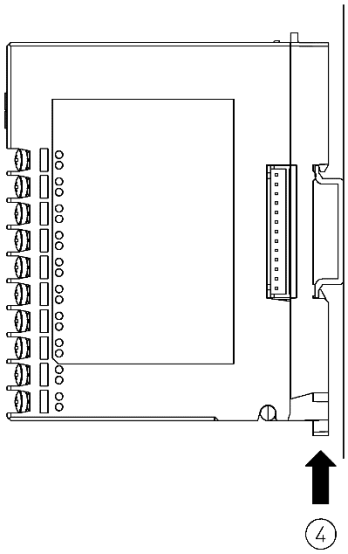

(Fig. 6.3-2)

Removal from the DIN rail

① Insert a flat blade screwdriver into the lock lever of this instrument and lower the lock lever until it stops.

② Remove this instrument from the DIN rail by lifting it from below.

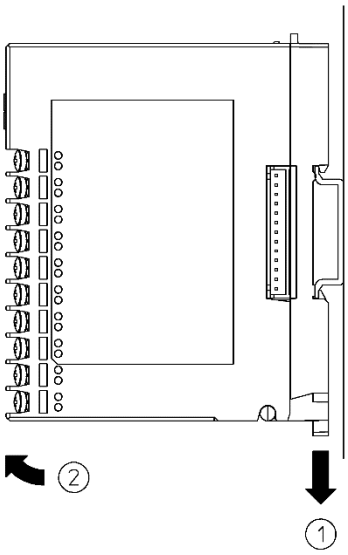

(Fig. 6.3-3)

Mounting multiple modules to the DIN rail

This section describes an example of mounting multiple control modules QTC-4 on the DIN rail.

① Remove the line cap on the right side of the QTC1-4P.

② Lower the lock lever of the QTC1-40, and mounting the QTC1-40 to the DIN rail.

③ Slide the QTC1-40 to the left and connect the connectors to each other.

④ Raise the lock lever of this instrument.
Make sure it is fixed to the DIN rail.

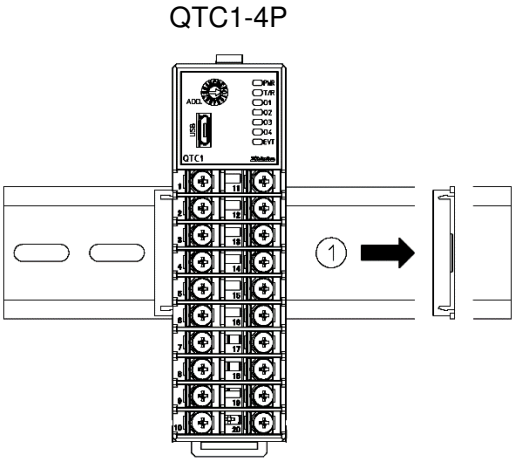

(Fig. 6.3-4)

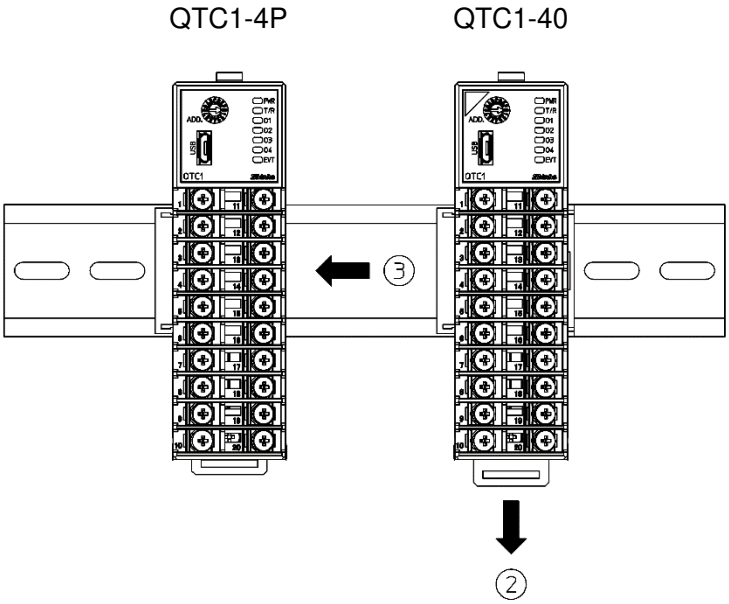

(Fig. 6.3-5)

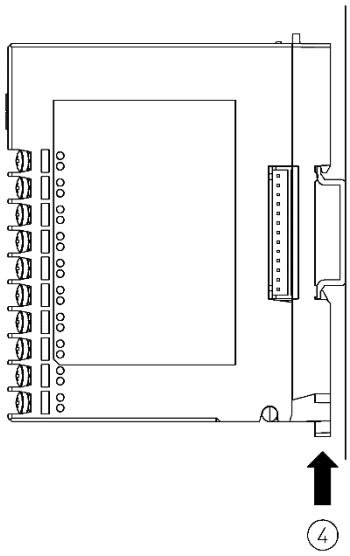

(Fig. 6.3-6)

This section describes an example of mounting communication expansion module QMC1 and control module QTC1-40 on the DIN rail.

① Remove the line cap on the right side of the QMC1.

② Lower the lock lever of the QTC1-40, and mounting the QTC1-40 to the DIN rail.

③ Slide the QTC1-40 to the left and connect the connectors to each other.

④ Raise the lock lever of the QTC1-40.
Make sure it is fixed to the DIN rail.

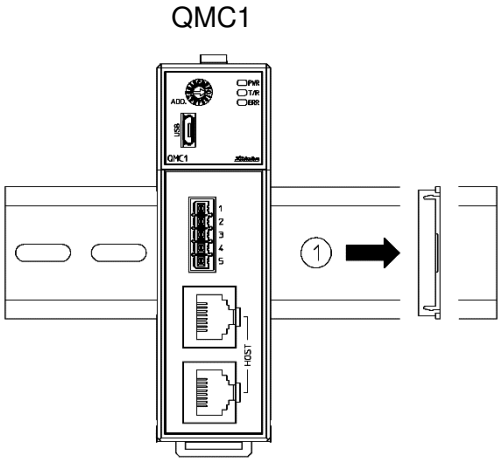

(Fig. 6.3-7)

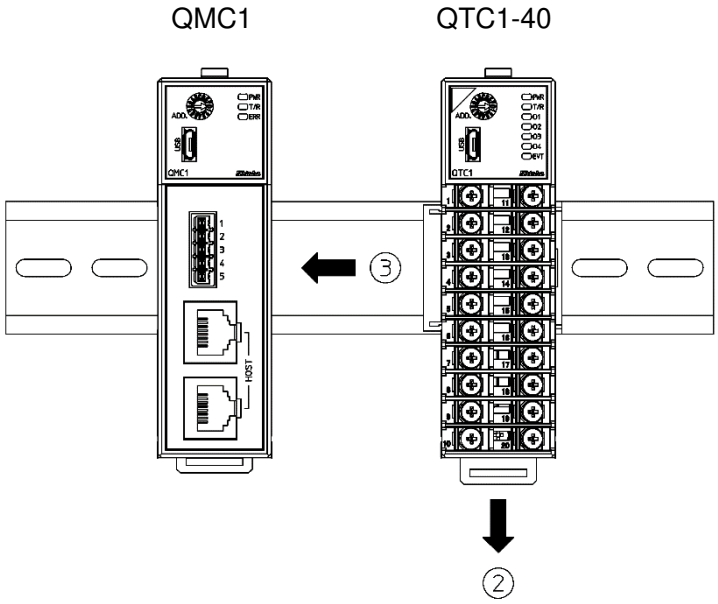

(Fig. 6.3-8)

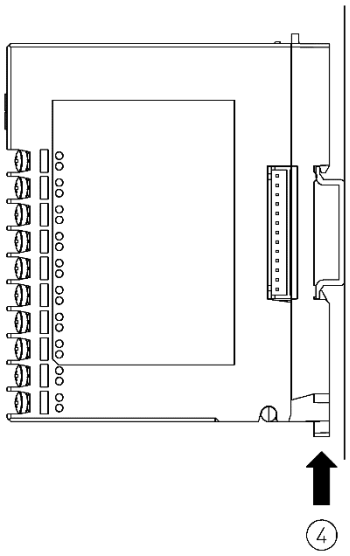

(Fig. 6.3-9)

Removal multiple modules from the DIN rail

This section describes an example of removing multiple control modules QTC-4 on the DIN rail.

① Insert a flat blade screwdriver into the lock lever of the QTC1-40 and lower the lock lever until it stops.

② Slide this instrument to the right side and disconnect it from the connector, then remove it from the DIN rail.

QTC1-4P QTC1-40

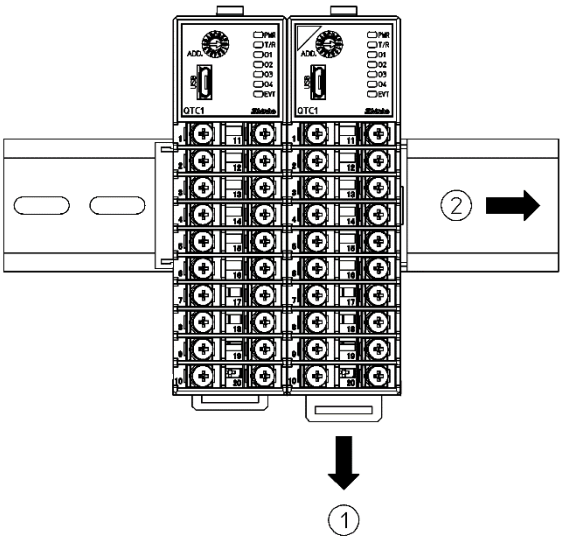

(Fig. 6.3-10)

7 Wiring

⚠ Warning

Turn off the power supply to this instrument before wiring.
If you work while the power is supplied, you may get an electric shock, which could result in an accident resulting in death or serious injury.

⚠ Caution

Do not connect two or more control module QTC1-4P (with power supply / communication option) in one unit.

7.1 Recommended Terminal

Use a solderless terminal with an insulation sleeve in which an M3 screw fits as shown below.

Use ring-type solderless terminals for the power supply section and serial communication section.

Solderless Terminal	Manufacturer	Model	Tightening torque
Y-type	Nichifu Terminal Industries Co., Ltd.	TMEV1.25Y-3	Input/output section: 0.63 N•m Power supply section: 0.5 N•m Serial communication section: 0.3 N•m
	Japan Solderless Terminal MFG Co., Ltd.	VD1.25-B3A	
Ring-type	Nichifu Terminal Industries Co., Ltd.	TMEV1.25-3	
	Japan Solderless Terminal MFG Co., Ltd.	V1.25-3	

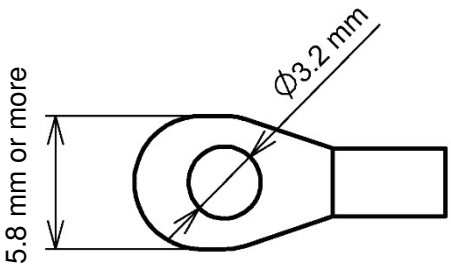

(Fig. 7.1-1)

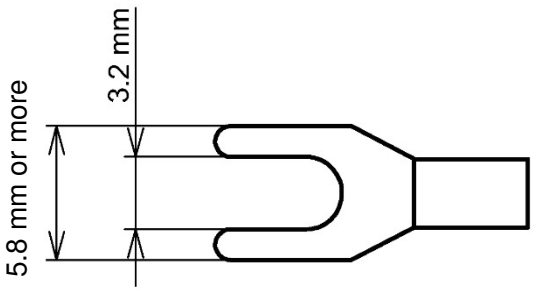

(Fig. 7.1-2)

7.2 Using Terminal Cover Precaution

Attach the terminal cover TC-QTC (sold separately) so that the shorter one is on the right side of the case.

For the wiring of terminal numbers 11 to 20, pass through the left side of the terminal cover.

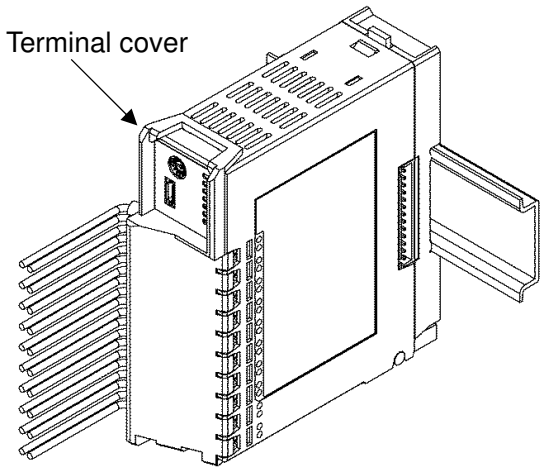

(Fig. 7.2-1)

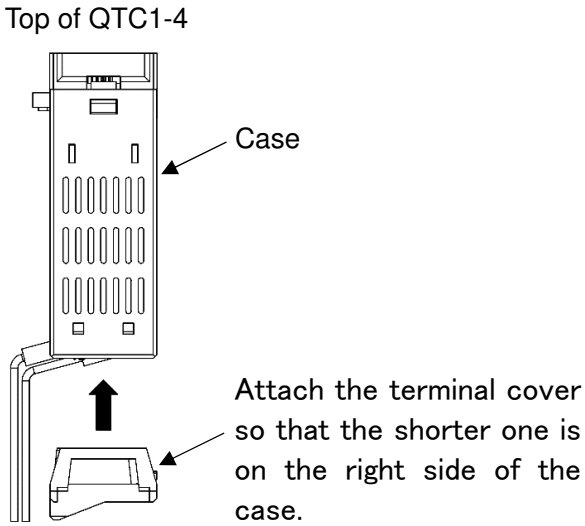

(Fig. 7.2-2)

7.3 Terminal Arrangement

7.3.1 Input and Output Terminal Arrangement

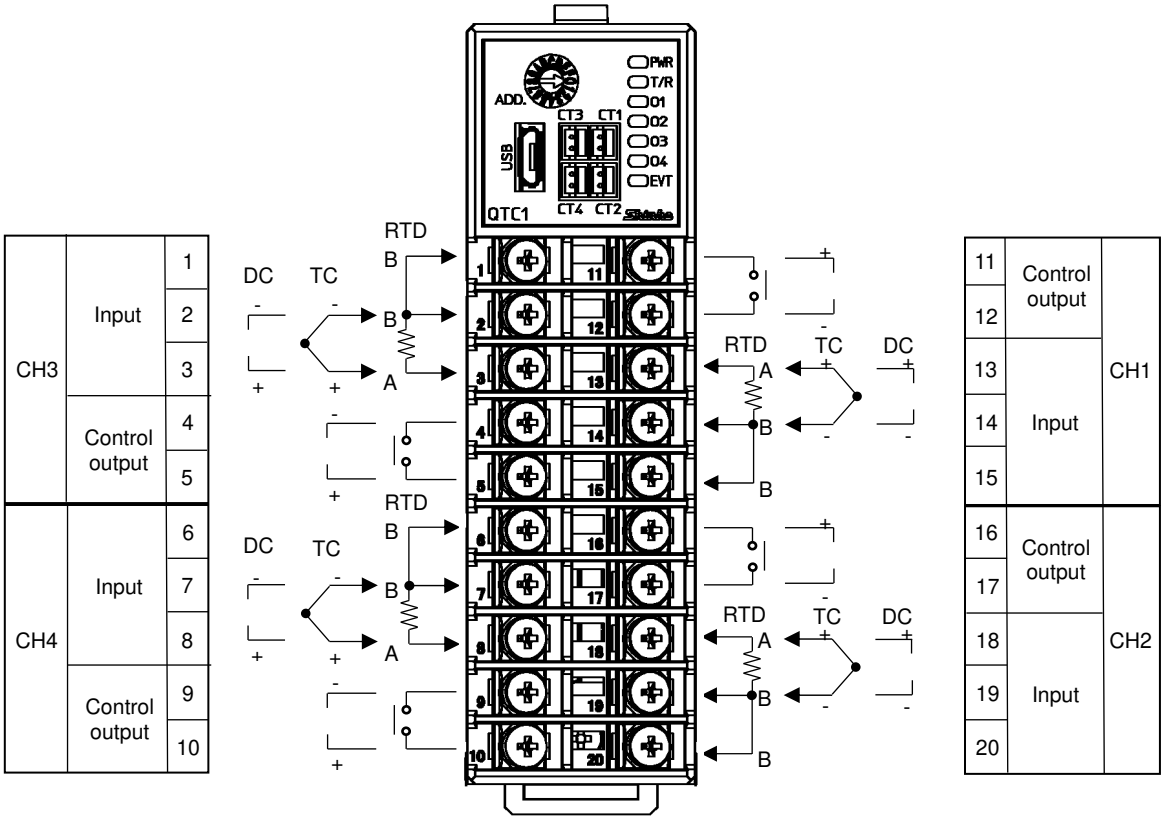

(Fig. 7.3.1-1)

7.3.2 Power Supply and Serial Communication Terminal Arrangement

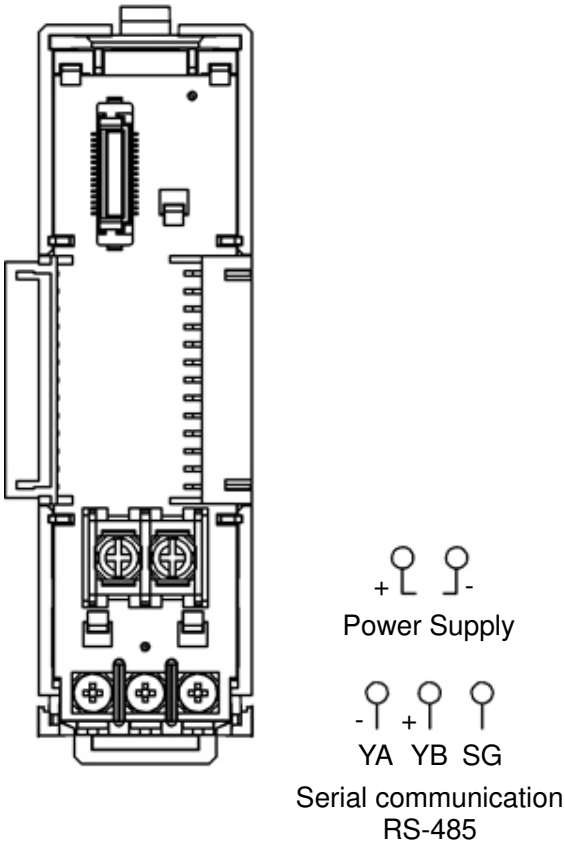

(Fig. 7.3.2-1)

7.3.3 Event Input and Output Terminal Arrangement

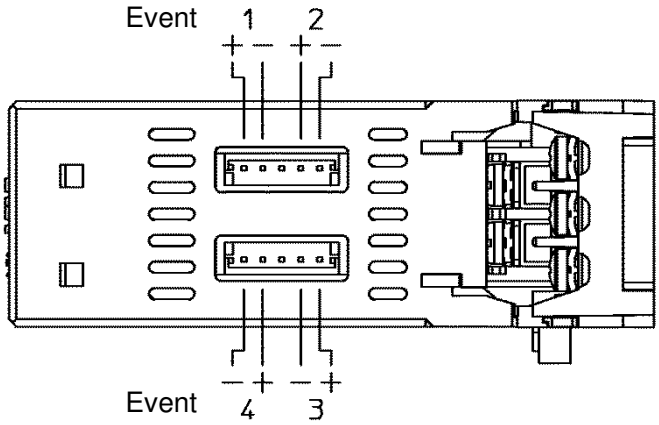

(Fig. 7.3.3-1)

7.4 Wiring

7.4.1 Wiring for Power Supply and Serial Communication

The terminal block for power supply and serial communication is located on the base of this instrument.

Wiring by the following procedure.

(1) Case removal

① Push the release lever on the top of this instrument to unlock it.

② Remove the case.

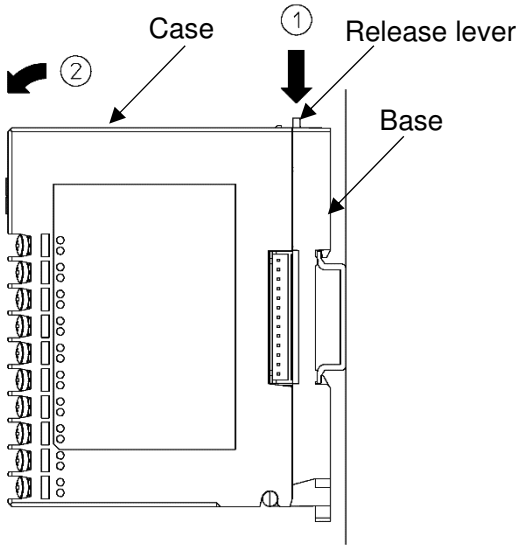

(Fig. 7.4.1-1)

(2) Wiring

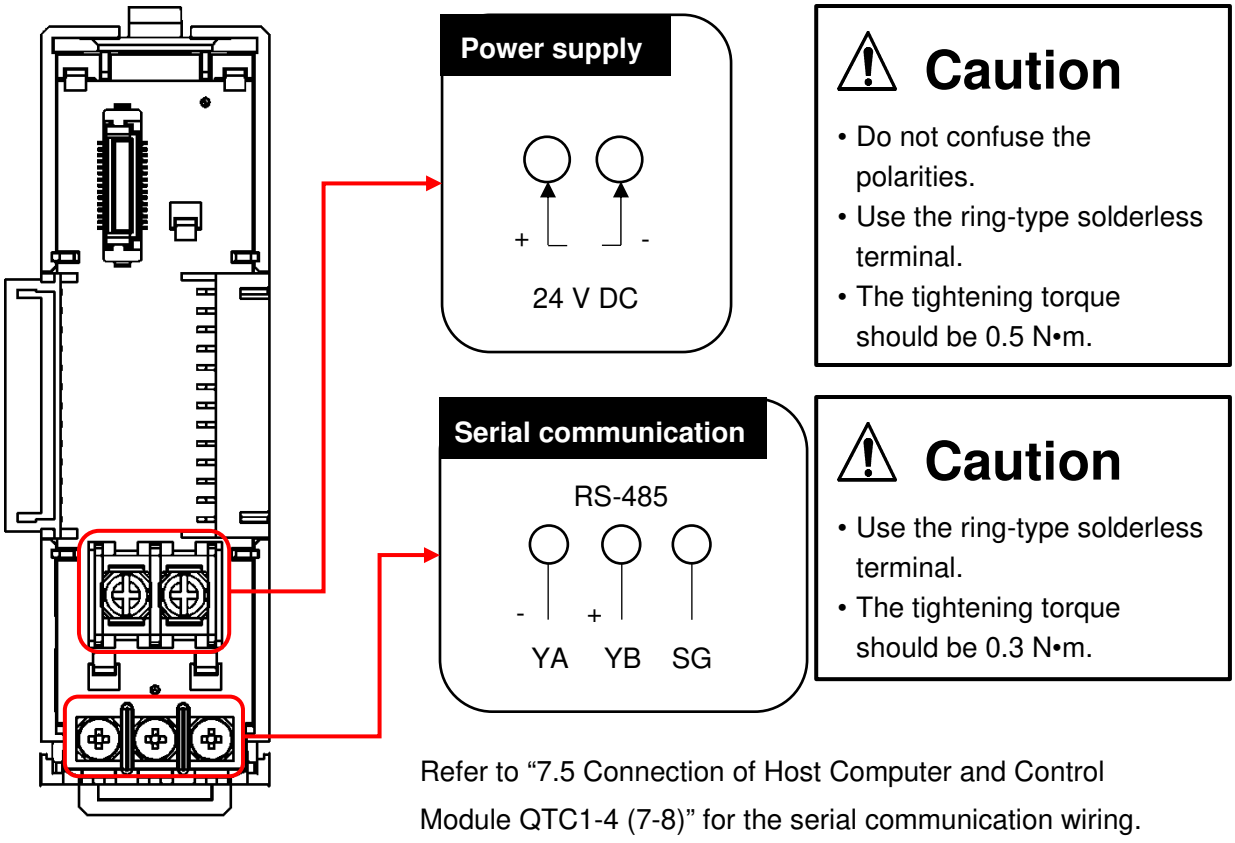

Refer to “7.5 Connection of Host Computer and Control Module QTC1-4 (7-8)” for the serial communication wiring.

(Fig. 7.4.1-2)

(3) Case mounting

① Hook the case on the lower part ① of this instrument.

② Mount the case so that the lower part ① of this instrument is the fulcrum and covers the release lever.
There is a clicking sound.

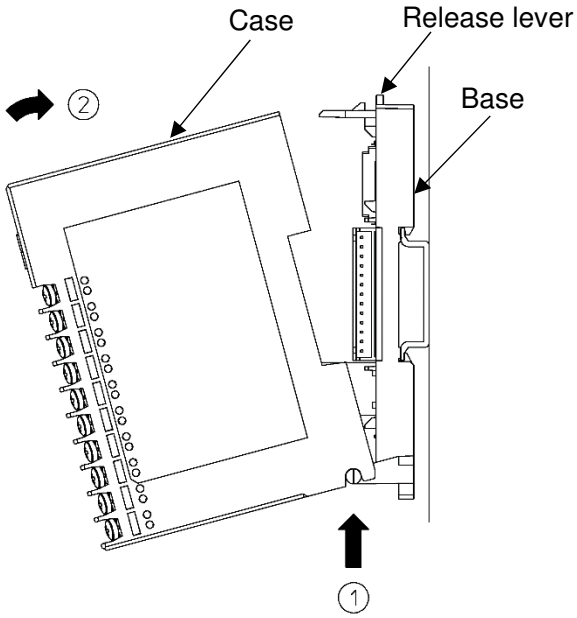

(Fig. 7.4.1-3)

7.4.2 Wiring for Input, Output and CT

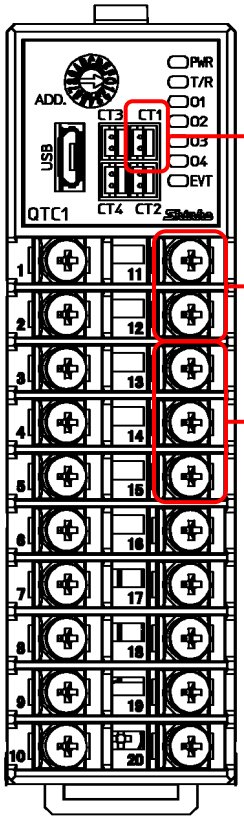

Option

CH1 heater burnout alarm

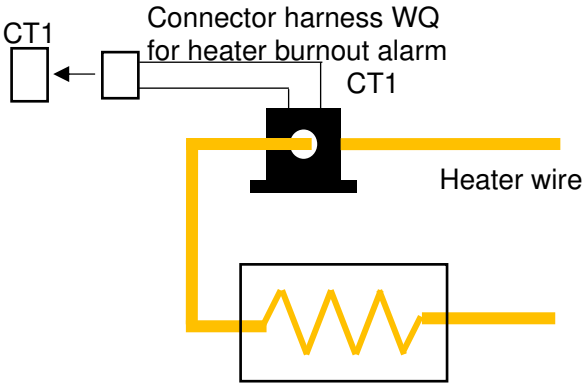

CH1 Control output

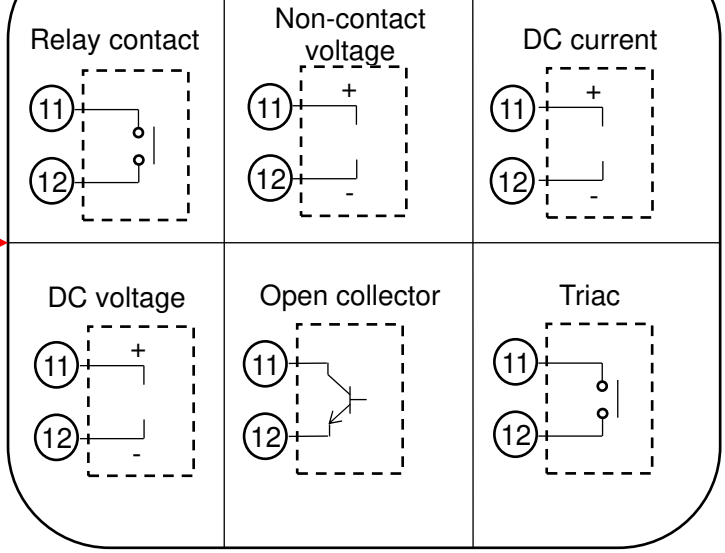

CH2 Control output: ⑯ ⑰
CH3 Control output: ⑤ ④
CH4 Control output: ⑩ ⑨

⚠ Caution

- Please note that CH1, CH2 and CH3, CH4 have different terminal arrangements.
- The tightening torque should be 0.63 N•m.

CH1 Input

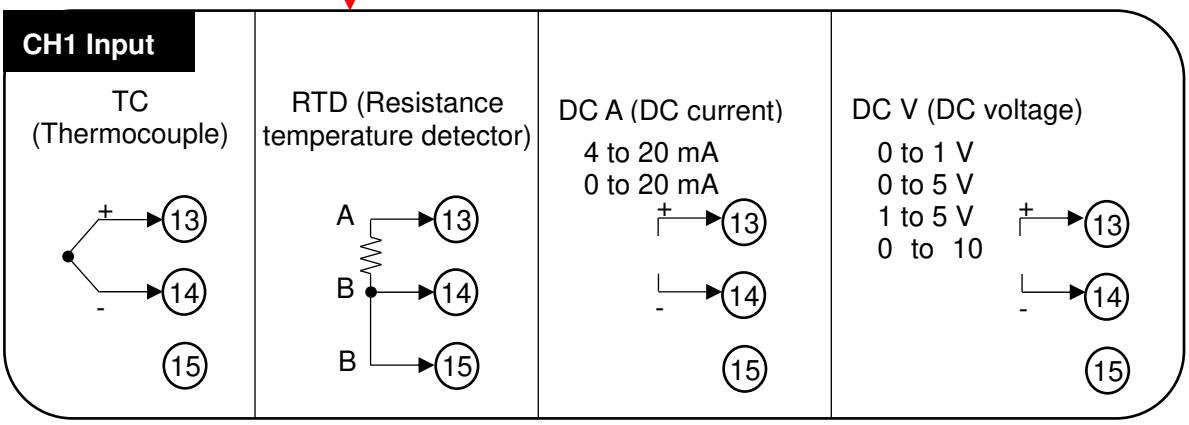

CH2 Input: ⑱ ⑲ ⑳
CH3 Input: ③ ② ①
CH4 Input: ⑧ ⑦ ⑥

(Fig. 7.4.2-1)

7.4.3 Wiring for Event Input and Event Output

Using the connector harness EVQ for event input/output.

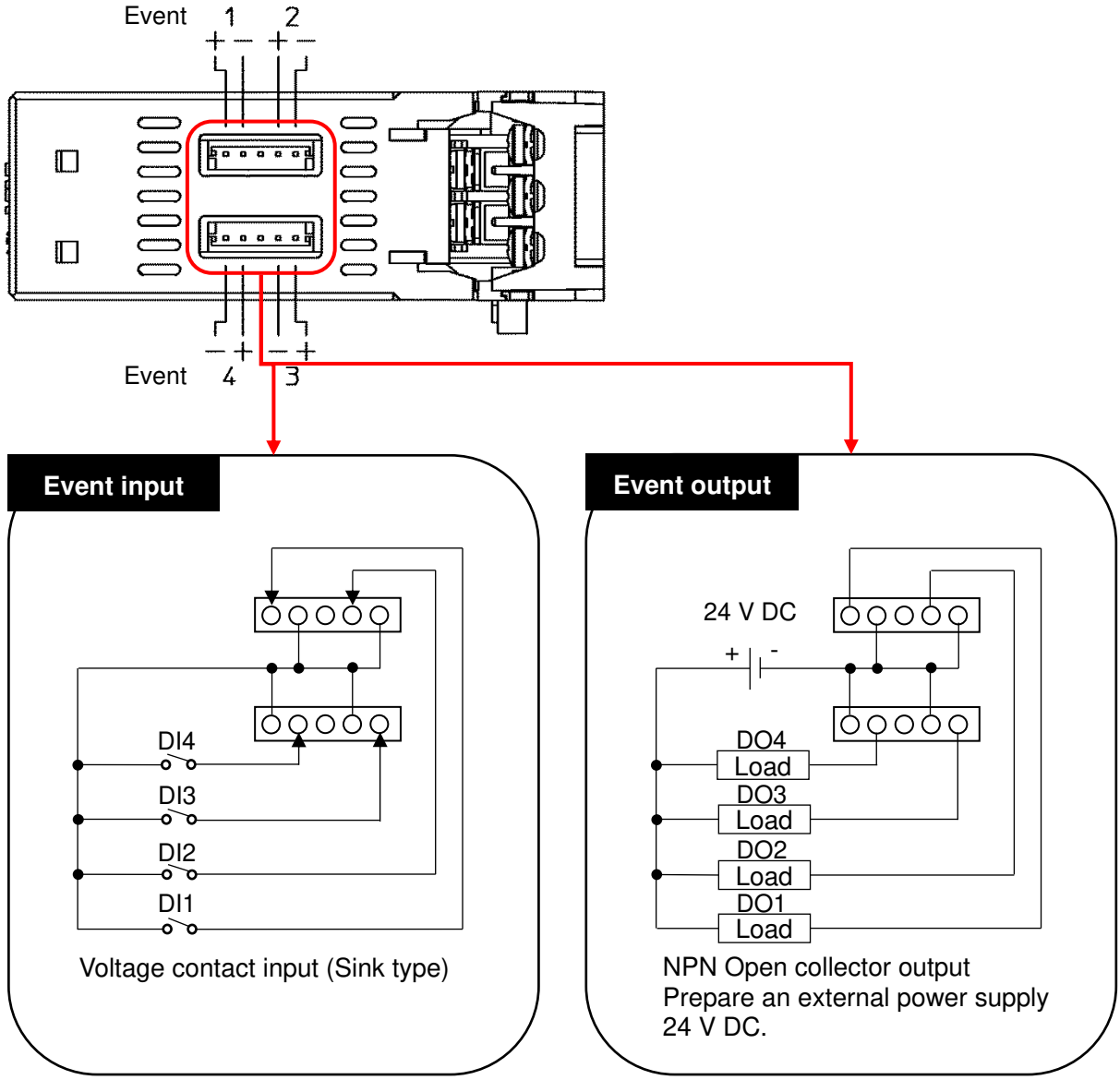

(Fig. 7.4.3-1)

7.5 Connection of Host Computer and Control Module QTC1-4

⚠ Caution

Do not connect two or more control module QTC1-4P (with power supply / communication option) in one unit.

7.5.1 Wiring Example When Using the USB Communication Cable CMC-001-1 (Sold separately)

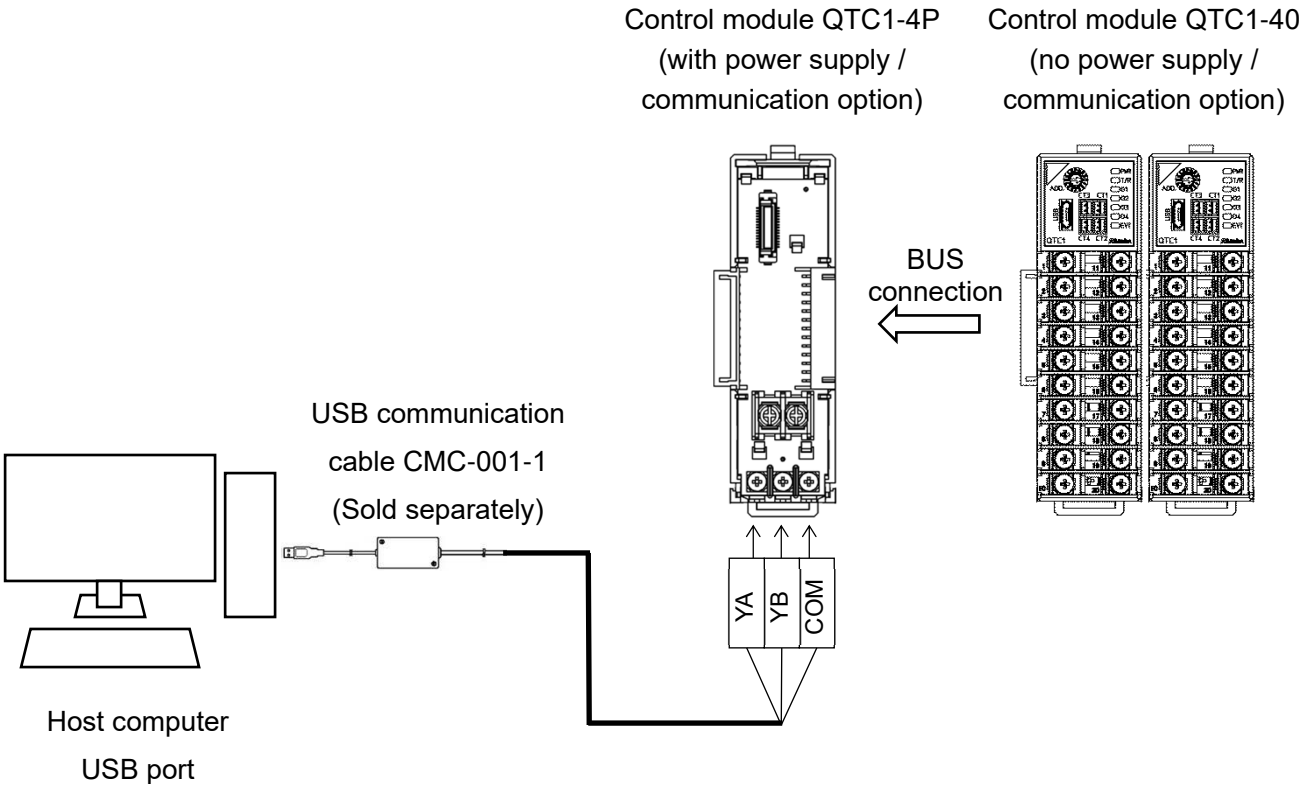

(Fig. 7.5.1-1)

7.5.2 Wiring Example When Using the Communication Converter IF-400 (Sold separately)

The communication converter IF-400 (sold separately) does not support communication speeds of 38400 bps and 57600 bps.

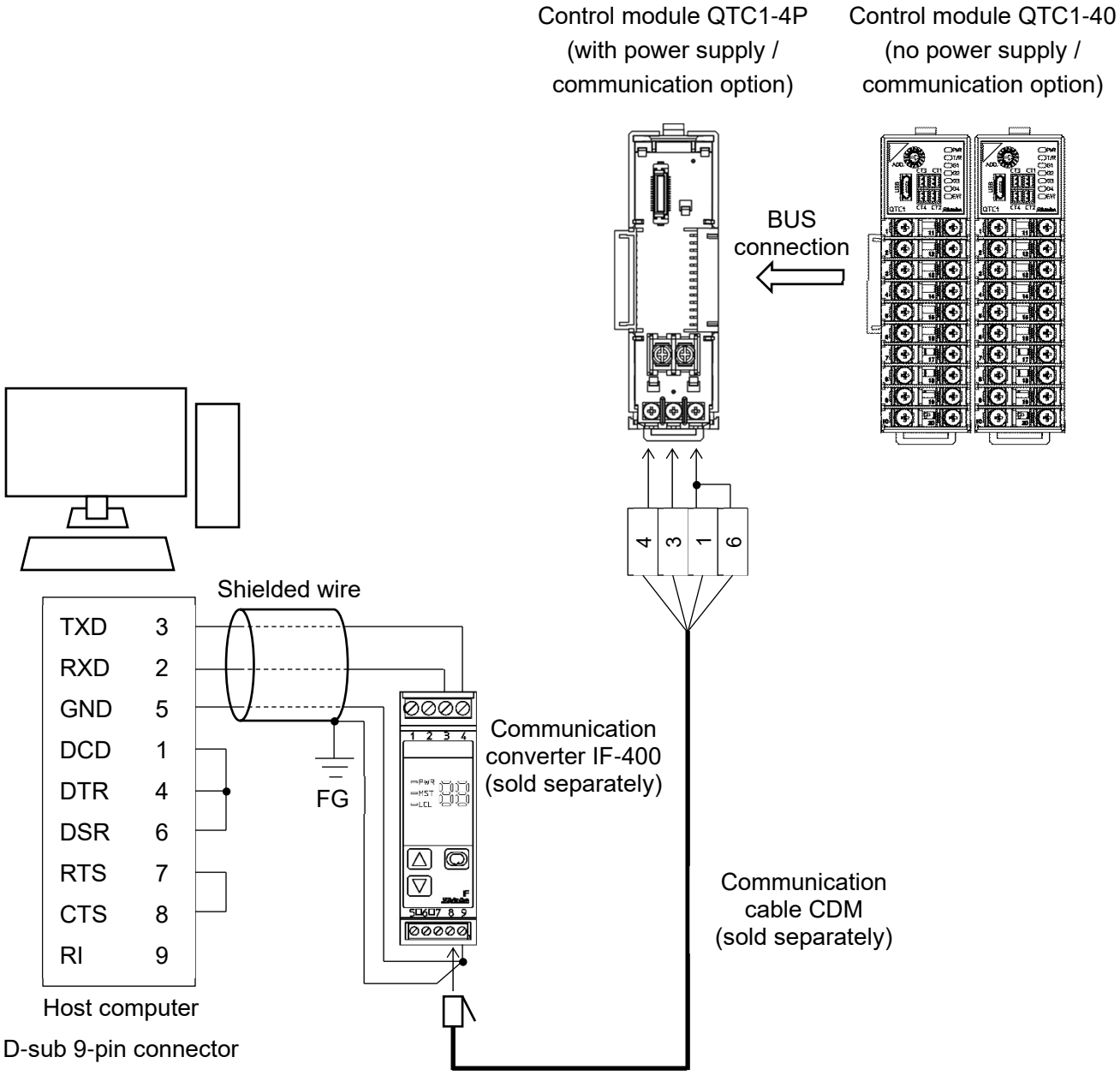

(Fig. 7.5.2-1)

Shielded wire

Connect only one side of the shielded wire to FG so that no current flows in the shield part.
If both sides of the shield are connected to FG, a closed circuit will be created between the shielded wire and the ground, and a current will flow through the shielded wire, making it more susceptible to noise. Be sure to ground FG.
Recommended cable: OTSC-VB 2PX0.5SQ by Onamba Co., Ltd. or equivalent (use twisted pair shielded wire).

Termination resistor (terminator)

The communication converter IF-400 (sold separately) has a built-in termination resistor.
The termination resistor is also called a terminator. It is a resistor attached to the end of wiring when peripheral devices are connected to the host computer in a chain, and prevents signal reflection and signal disturbance at the end.
Since this instrument has a built-in pull-up resistor and pull-down resistor, no termination resistor is required on the communication line.

8 Setting of Specification

Set the specifications.

This section describes how to set specifications using console software (SWC-QTC101M).

8.1 Preparation

8.1.1 Preparation of USB Communication Cable and Console Software

Please prepare the USB communication cable and the console software.

- USB communication cable

  USB-micro USB Type-B (commercial item)
- Console software (SWC-QTC101M)

  Please download from our website and install.

  Click http://www.shinko-technos.co.jp/e/index.html → Support/Download → Software

8.1.2 Connecting to Host Computer

(1) Connect the micro USB Type-B side of the USB communication cable to the console communication connector of this instrument.

(2) Connect the USB plug of the USB communication cable to the USB port of the host computer.

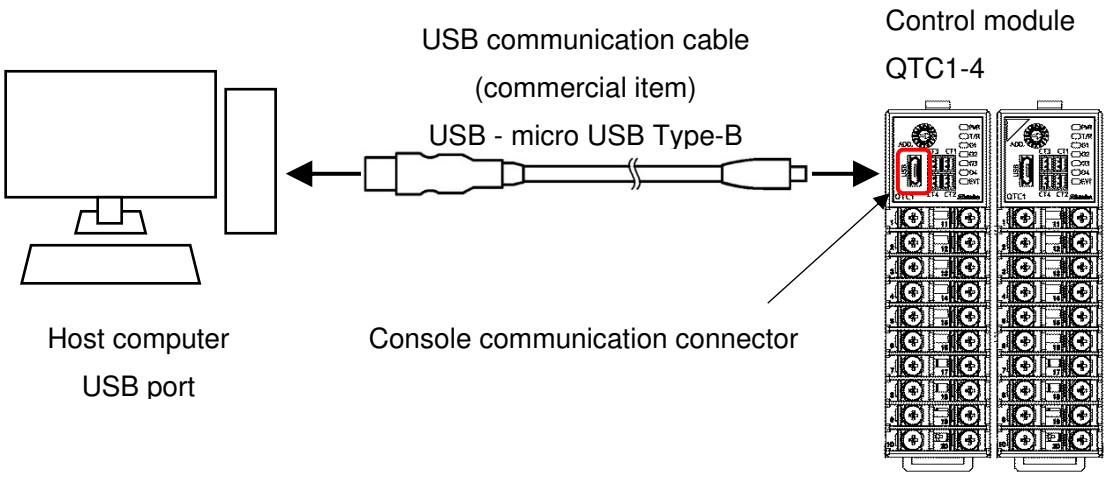

(Fig. 8.1.2-1)

(3) Checking the COM port number

Follow the procedure below to check the COM port number.

① Right-click “Start” → Click “Device manager” from menu.

② When “USB Serial Port (COM3)” is displayed in “Port (COM and LPT)”, the COM port is assigned to No. 3.

Check the COM port number, and then close “Device Manager”.

③ Start the console software (SWC-QTC101M).

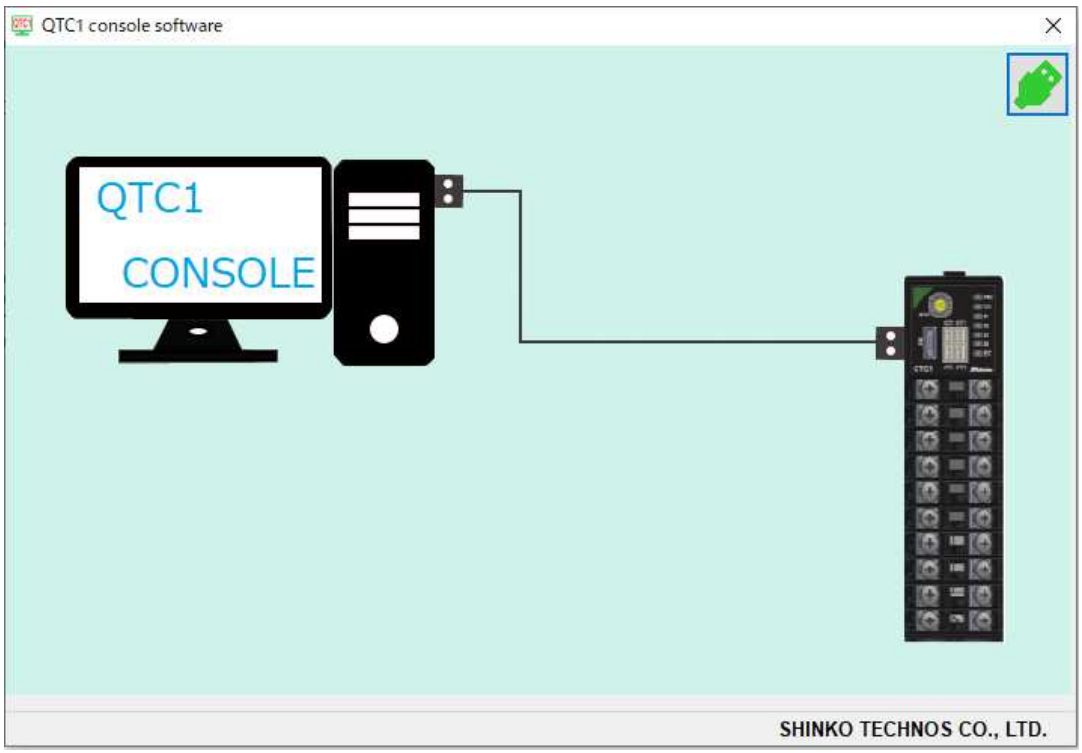

(Fig. 8.1.2-2)

④ Click [User (U)] on the menu bar → [Communication condition (C)].

Display the communication condition setting screen.

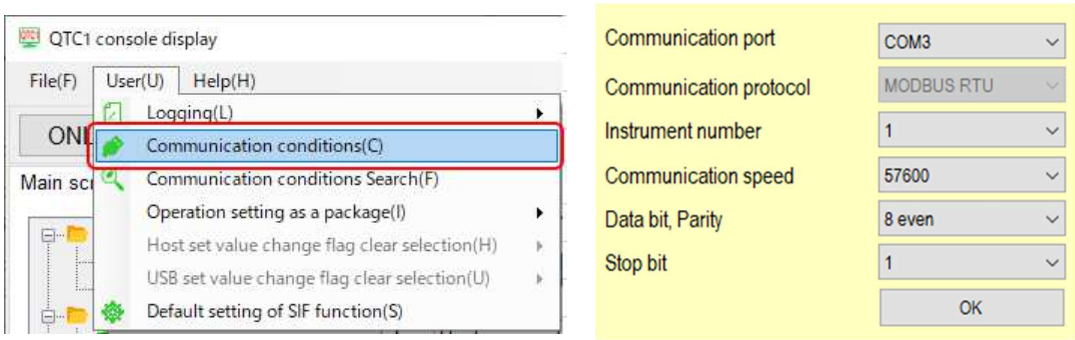

(Fig. 8.1.2-3)

⑤ Set the communication condition as shown below.

Setup Items	Setting Value
Communication port	Select the COM port number confirmed in (2).
Communication protocol	MODBUS RTU

⑥ Click [OK]

⑦ Click [File (F)] on the menu bar → [Upload (U)].

Read all the setting values of the connected control module QTC1-4.

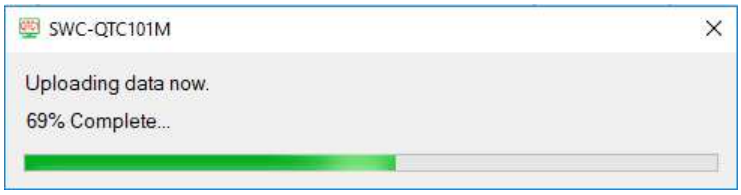

(Fig. 8.1.2-4)

⑧ Display the monitor value screen.

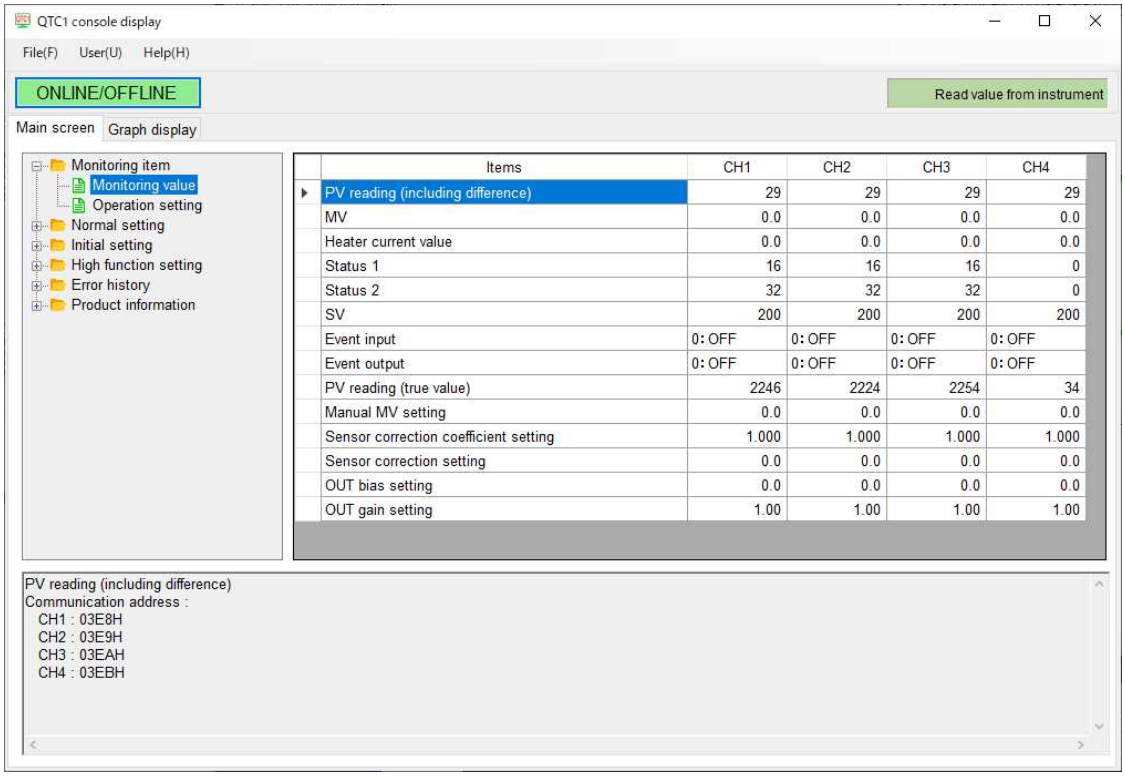

(Fig. 8.1.2-5)

The specifications are ready.

8.2 Specification Setting

Basic operation of specification setting

Before setting the specifications, how to select the selection item and how to set the setting item are explained.

Select the selection item

This section explains how to select the selection item by using CH1 control enable/disable selection as an example.

Click on the selection item for the channel.

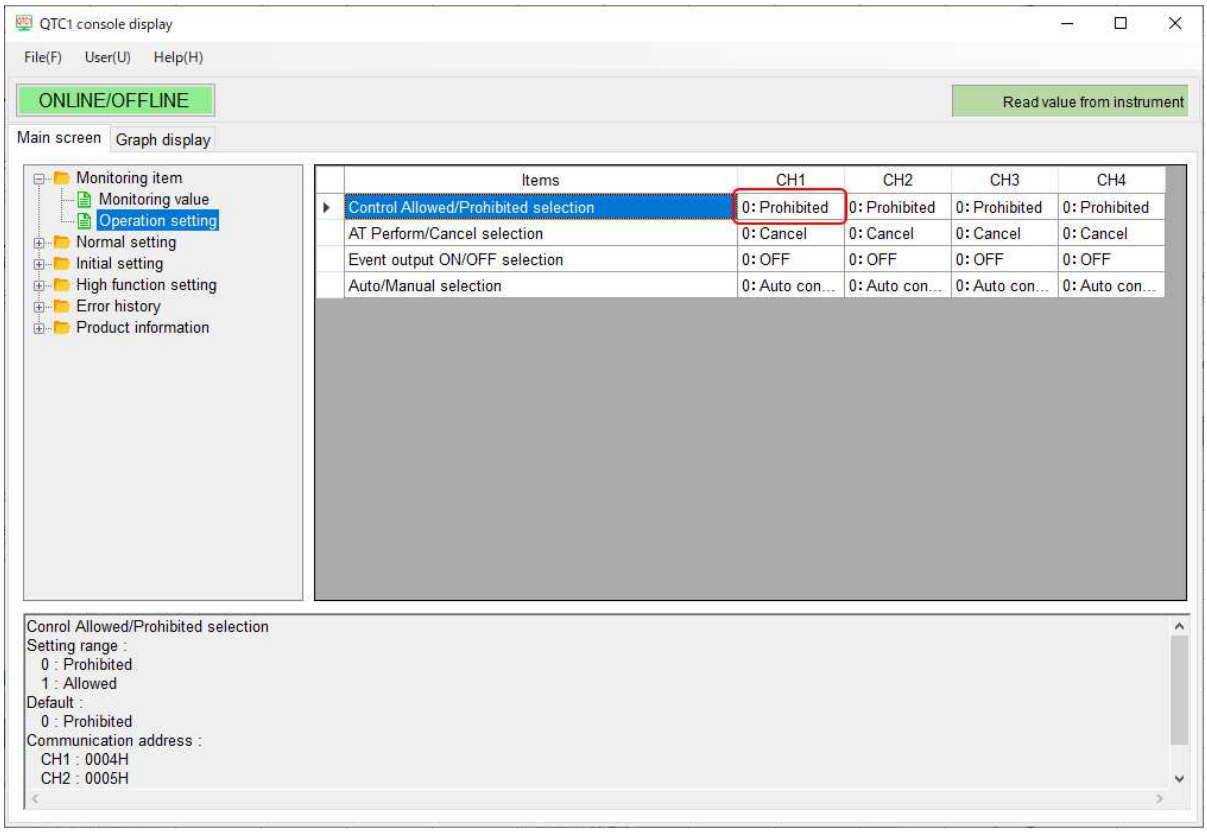

(Fig. 8.2-1)

Display the selection item list.

Click “0: Prohibited” or “1: Allowed”.

Transfer the selected contents to the control module QTC1-4.

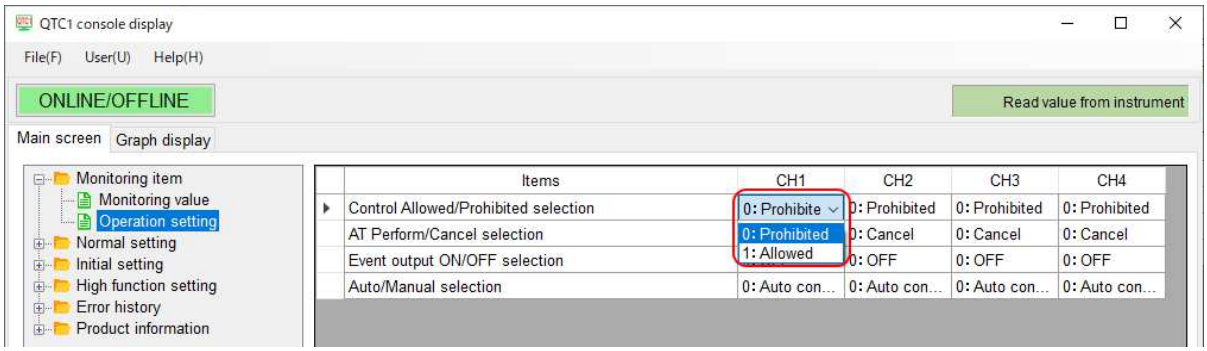

(Fig. 8.2-2)

Set the setting item

This section explains how to set the setting item by using CH1 SV setting as an example.

Click on the setting item for the channel.

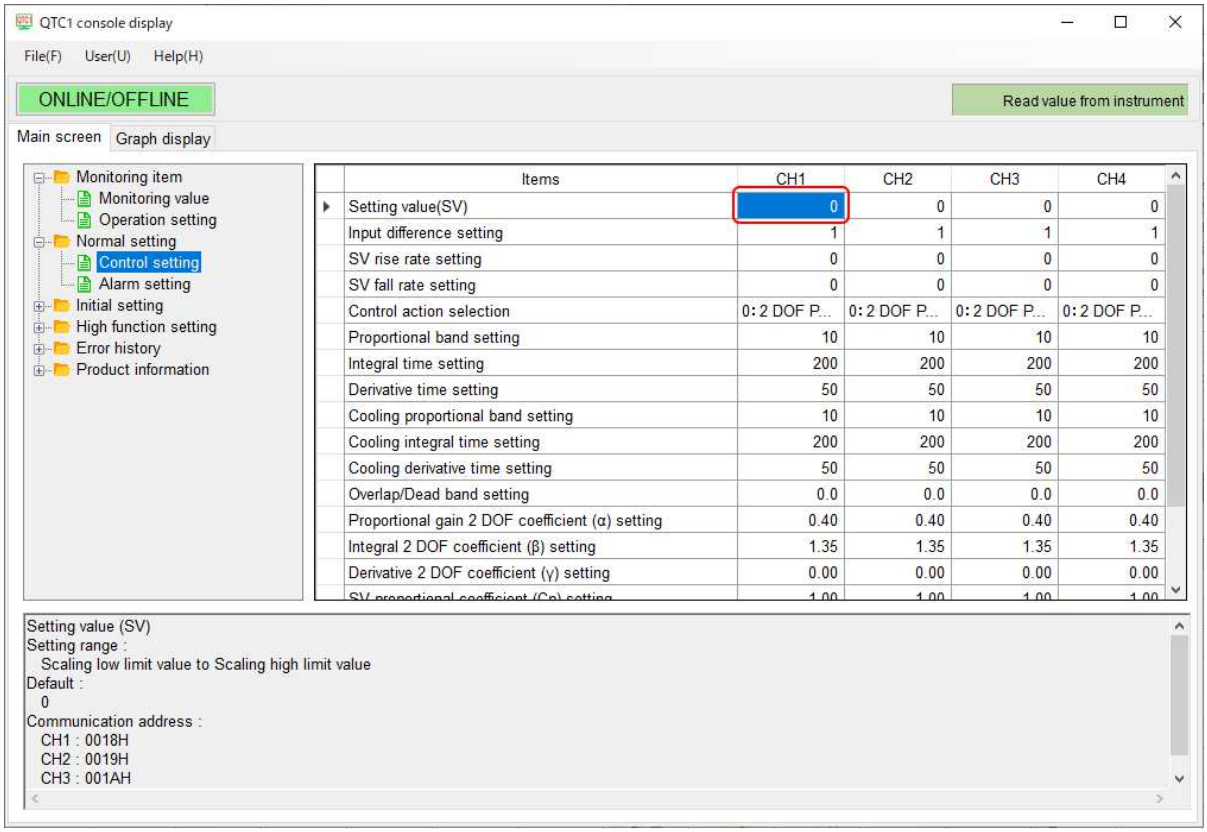

Items	CH1	CH2	CH3	CH4
Setting value(SV)	0	0	0	0
Input difference setting	1	1	1	1
SV rise rate setting	0	0	0	0
SV fall rate setting	0	0	0	0
Control action selection	0: 2 DOF P...	0: 2 DOF P...	0: 2 DOF P...	0: 2 DOF P...
Proportional band setting	10	10	10	10
Integral time setting	200	200	200	200
Derivative time setting	50	50	50	50
Cooling proportional band setting	10	10	10	10
Cooling integral time setting	200	200	200	200
Cooling derivative time setting	50	50	50	50
Overlap/Dead band setting	0.0	0.0	0.0	0.0
Proportional gain 2 DOF coefficient (α) setting	0.40	0.40	0.40	0.40
Integral 2 DOF coefficient (β) setting	1.35	1.35	1.35	1.35
Derivative 2 DOF coefficient (γ) setting	0.00	0.00	0.00	0.00

(Fig. 8.2-3)

Display the numeric keypad screen.

The current setting value and setting range are displayed on the numeric keypad screen.

Set within the setting range.

Input the setting value, and click [OK]. (*)

Transfer the setting value to the control module QTC1-4.

(*): The setting value can also be entered from the keyboard of the host computer.

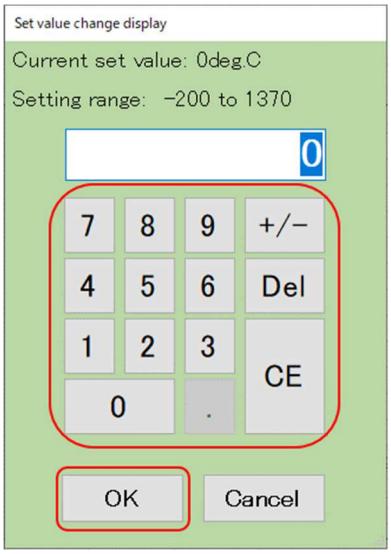

(Fig. 8.2-4)

8.2.1 Monitoring Value Setting

Display PV, output manipulated variable, state 1 reading value and state 2 reading value, and set monitor value parameters such as manual manipulated variable, sensor correction coefficient and sensor correction.

Click [Monitoring item] of [Main screen] tab → [Monitoring value].

Display the monitoring value screen.

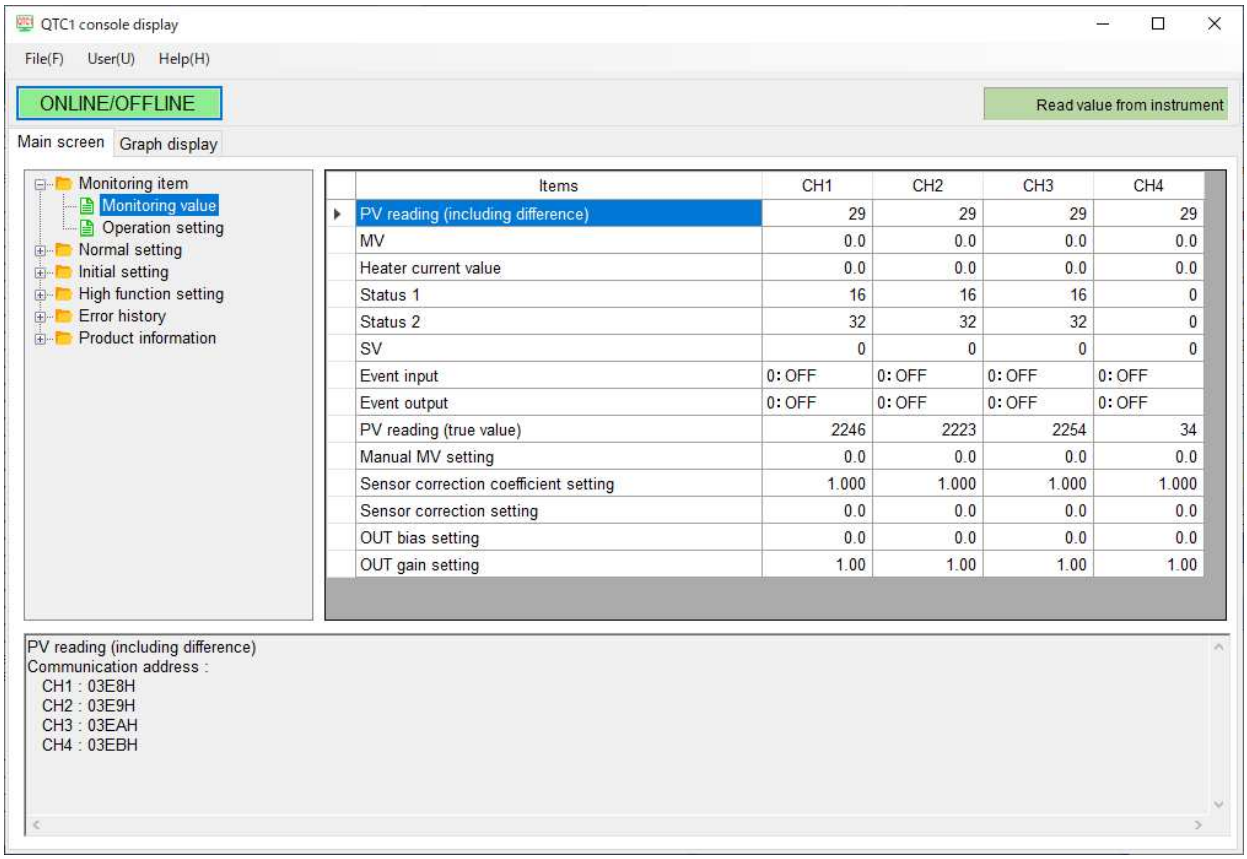

Items	CH1	CH2	CH3	CH4
PV reading (including difference)	29	29	29	29
MV	0.0	0.0	0.0	0.0
Heater current value	0.0	0.0	0.0	0.0
Status 1	16	16	16	0
Status 2	32	32	32	0
SV	0	0	0	0
Event input	0: OFF	0: OFF	0: OFF	0: OFF
Event output	0: OFF	0: OFF	0: OFF	0: OFF
PV reading (true value)	2246	2223	2254	34
Manual MV setting	0.0	0.0	0.0	0.0
Sensor correction coefficient setting	1.000	1.000	1.000	1.000
Sensor correction setting	0.0	0.0	0.0	0.0
OUT bias setting	0.0	0.0	0.0	0.0
OUT gain setting	1.00	1.00	1.00	1.00

(Fig. 8.2.1-1)

This section describes each setting item.

- Setting item
  This is the setting item of control module QTC1-4.
- Channel
  This is the channel number of control module QTC1-4.
- Address [HEX (Hexadecimal)]
  This is the address of each channel of control module QTC1-4.
- Description, setting range and selection item
  This is the description of setting item, the setting range and the selection item.
- Factory default
  This is the factory shipment default value of the setting item.

Setting item	Channel	Address [HEX]	Description, setting range and selection item	Factory default
MV	CH1 CH2 CH3 CH4	0014 0015 0016 0017	Set the MV for manual control. Refer to “14.2.10 Auto/Manual Control Switching (14-9)”. Setting range: -5.0 to 105.0 %	MV when switching from automatic control to manual control
Sensor correction coefficient setting	CH1 CH2 CH3 CH4	0084 0085 0086 0087	Set the sensor correction coefficient. Set the slope of the sensor input value. Refer to “12.4 Correct PV (12-9)”. Setting range: 0.000 to 10.000	1.000
Sensor correction setting	CH1 CH2 CH3 CH4	0088 0089 008A 008B	Set the sensor correction value. Refer to “12.4 Correct PV (12-9)”. Setting range: -100.0 to 100.0 °C (-180.0 to 180.0 °F) -1000 to 1000 (when DC current and DC voltage input)	When input code M is specified: 0 °C (°F) When input code A, V is specified: 0
Output bias setting	CH1 CH2 CH3 CH4	01C0 01C1 01C2 01C3	When the output distribution of the controlled object is known in advance, set the bias value for the reference output. Setting range: 0.0 to 100.0 %	0.0 %
Output gain setting	CH1 CH2 CH3 CH4	01C4 01C5 01C6 01C7	When the output distribution of the controlled object is known in advance, set the gain (ratio) with respect to the reference output. Setting range: 0.00 to 10.00 times	1.00 times

8.2.2 Operation Parameters Setting

Set the operation parameters of Control Enable/Disable, AT Perform/Cancel, Event output ON/OFF, and Auto/Manual control.

Click [Monitoring item] of [Main screen] tab → [Operation setting].

Display the Operation setting screen.

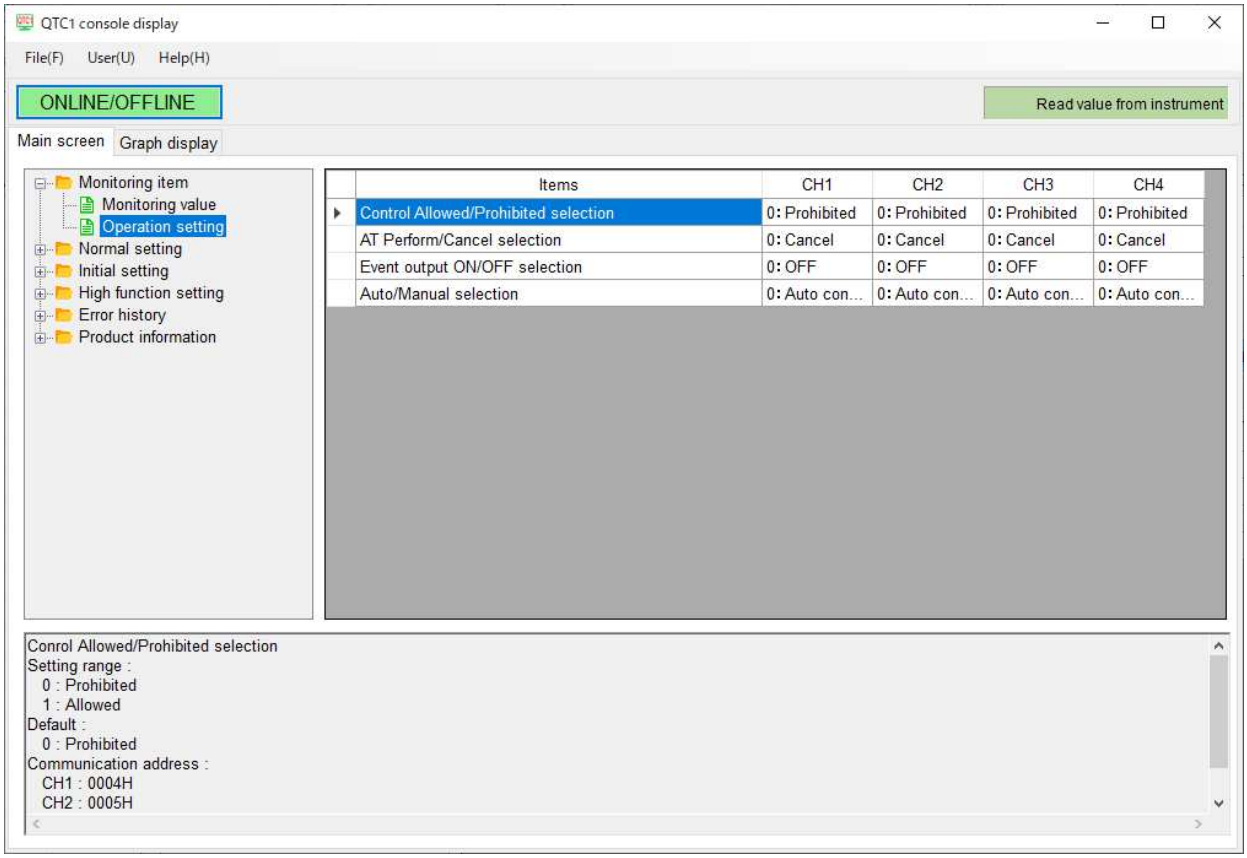

(Fig. 8.2.2-1)

Setting item	Channel	Address [HEX]	Description, setting range and selection item	Factory default
Control Allowed/ Prohibited selection	CH1 CH2 CH3 CH4	0004 0005 0006 0007	Select Control Allowed or Control Prohibited. Selection item: 0: Control Prohibited 1: Control Allowed	0: Prohibited
AT Perform/ Cancel selection	CH1 CH2 CH3 CH4	0008 0009 000A 000B	Select AT Perform or AT Cancel. Selection item: 0: Cancel 1: Perform	0: Cancel
Event output ON/OFF selection	CH1 CH2 CH3 CH4	000C 000D 000E 000F	When the event output flag is set from the host, select Event output ON or Event output OFF. Selection item: 0: OFF 1: ON	0: OFF
Auto/Manual control selection	CH1 CH2 CH3 CH4	0010 0011 0012 0013	Select Automatic control or Manual control. Refer to “14.2.10 Auto/Manual Control Switching (14-9)”. Selection item: 0: Auto control 1: Manual control	0: Auto control

8.2.3 Control Setting

Set the control parameters such as SV, SV rise rate, SV fall rate, control action and PID.

Click [Monitoring item] of [Main screen] tab → [Control setting].

Display the Control setting screen.

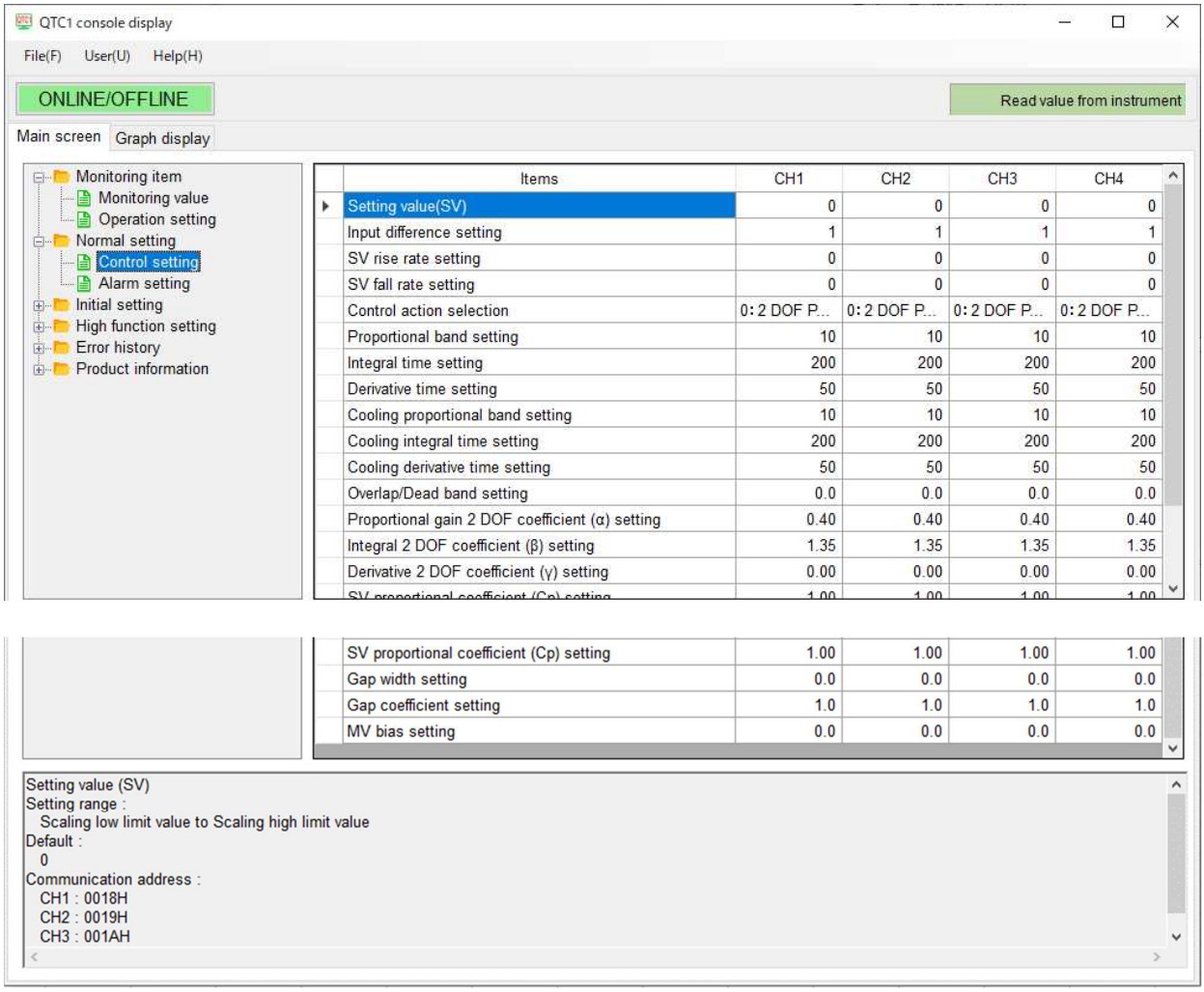

Items	CH1	CH2	CH3	CH4
Setting value(SV)	0	0	0	0
Input difference setting	1	1	1	1
SV rise rate setting	0	0	0	0
SV fall rate setting	0	0	0	0
Control action selection	0: 2 DOF P...	0: 2 DOF P...	0: 2 DOF P...	0: 2 DOF P...
Proportional band setting	10	10	10	10
Integral time setting	200	200	200	200
Derivative time setting	50	50	50	50
Cooling proportional band setting	10	10	10	10
Cooling integral time setting	200	200	200	200
Cooling derivative time setting	50	50	50	50
Overlap/Dead band setting	0.0	0.0	0.0	0.0
Proportional gain 2 DOF coefficient (α) setting	0.40	0.40	0.40	0.40
Integral 2 DOF coefficient (β) setting	1.35	1.35	1.35	1.35
Derivative 2 DOF coefficient (γ) setting	0.00	0.00	0.00	0.00
SV proportional coefficient (Cp) setting	1.00	1.00	1.00	1.00
Gap width setting	0.0	0.0	0.0	0.0
Gap coefficient setting	1.0	1.0	1.0	1.0
MV bias setting	0.0	0.0	0.0	0.0

(Fig. 8.2.3-1)

Setting item	Channel	Address [HEX]	Description, setting range and selection item	Factory default
Setting value (SV)	CH1 CH2 CH3 CH4	0018 0019 001A 001B	Set the SV to be controlled. Setting range: Scaling lower limit to Scaling high limit	0 °C(°F)
Input difference setting	CH1 CH2 CH3 CH4	0134 0135 0136 0137	Set the value of the input difference to be detected by the input difference detection function. Setting range: 1 to 1000 °C (1 to 1800 °F) or 0.1 to 1000.0 °C (0.1 to 1800.0 °F) when DC current and DC voltage input 1 to 10000	When input code M is specified: 1 °C (°F) When input code A, V is specified: 1
SV rise rate setting	CH1 CH2 CH3 CH4	0090 0091 0092 0093	Set the rate of rise when changing SV by the set value ramp function. Refer to “14.2.7 Set Value Ramp Function (14-8)”. Setting range: 0 to 10000 °C/min (0 to 18000 °F/min) or 0.0 to 1000.0 °C/min (0.0 to 1800.0 °F/min) when DC current and DC voltage input 0 to 10000/min	When input code M is specified: 0 °C/min (°F/min) When input code A, V is specified: 0/min
SV fall rate setting	CH1 CH2 CH3 CH4	0094 0095 0096 0097	Set the fall of increase when changing SV by the set value ramp function. Refer to “14.2.7 Set Value Ramp Function (14-8)”. Setting range: 0 to 10000 °C/min (0 to 18000 °F/min) or 0.0 to 1000.0 °C/min (0.0 to 1800.0 °F/min) when DC current and DC voltage input 0 to 10000/min	When input code M is specified: 0 °C/min (°F/min) When input code A, V is specified: 0/min
Control action selection	CH1 CH2 CH3 CH4	0138 0139 013A 013B	Select the control action. This item can be selected only when Control Disable is set. Refer to “14.1 Control Action Explanation (14-1)”. Selection item: 0: 2 DOF PID control 1: Fast-PID control 2: Slow-PID control 3: ON-OFF control 4: Gap-PID control	0: 2 DOF PID control

Setting item	Channel	Address [HEX]	Description, setting range and selection item	Factory default
Proportional band setting	CH1 CH2 CH3 CH4	001C 001D 001E 001F	Set the proportional band setting. When “1: Heating/Cooling Control” is selected in control function selection, the heating side proportional band setting is set. Setting range: 1 to input span °C (°F) or 0.1 to input span °C (°F) when DC current and DC voltage input 0.10 to 100.00 %	When input code M is specified: 10 °C (18 °F) When input code A, V is specified: 2.50 %
Integral time setting	CH1 CH2 CH3 CH4	0020 0021 0022 0023	Set the integral time. When “1: Heating/Cooling Control” is selected in control function selection, the the heating side integral time setting is set. The setting range varies depending on the selection of Integral/Derivative decimal point position selection. Setting range: 0 to 3600 seconds or 0.0 to 2000.0 seconds When select “2: Slow-PID control” of control action selection 1 to 3600 seconds or 0.1 to 2000.0 seconds	200 seconds
Derivative time setting	CH1 CH2 CH3 CH4	0024 0025 0026 0027	Set the derivative time. When “1: Heating/Cooling Control” is selected in control function selection, the the heating side derivative time setting is set. The setting range varies depending on the selection of Integral/Derivative decimal point position selection. Setting range: 0 to 3600 seconds or 0.0 to 2000.0 seconds	50 seconds

Setting item	Channel	Address [HEX]	Description, setting range and selection item	Factory default
Cooling proportional band setting	CH1 CH2 CH3 CH4	0194 0195 0196 0197	Set the cooling proportional band. This is valid when "1: Heating/Cooling Control" is selected in control function selection. Set with CH1 or CH3. It is disabled when set with CH2 or CH4. Setting range: 0 to input span °C (°F) or 0.0 to input span °C (°F) when DC current and DC voltage input 0.00 to 100.00 %	When input code M is specified: 10 °C (18 °F) When input code A, V is specified: 2.50 %
Cooling integral time setting	CH1 CH2 CH3 CH4	0198 0199 019A 019B	Set the cooling integral time setting. This is valid when "1: Heating/Cooling Control" is selected in control function selection. Set with CH1 or CH3. It is disabled when set with CH2 or CH4. The setting range varies depending on the selection of Integral/Derivative decimal point position selection. Setting range: 0 to 3600 seconds or 0.0 to 2000.0 seconds when select “2: Slow-PID control” of control action selection 1 to 3600 seconds or 0.1 to 2000.0 seconds	200 seconds
Cooling derivative time setting	CH1 CH2 CH3 CH4	019C 019D 019E 019F	Set the cooling derivative time setting This is valid when "1: Heating/Cooling Control" is selected in control function selection. Set with CH1 or CH3. It is disabled when set with CH2 or CH4. The setting range varies depending on the selection of Integral/Derivative decimal point position selection. Setting range: 0 to 3600 seconds or 0.0 to 2000.0 seconds	50 seconds

Setting item	Channel	Address [HEX]	Description, setting range and selection item	Factory default
Overlap/ Dead band setting	CH1 CH2 CH3 CH4	01A8 01A9 01AA 01AB	Set the overlap/dead band setting. Refer to “14.5.6 Heating/Cooling Control Operation D iagram (When Setting Dead Band) (14-35)” and “14.5.7 Heating/Cooling Control Operation Diagram (When Setting Overlap Band) (14-36)”. This is valid when "1: Heating/Cooling Control" is selected in control function selection. Set with CH1 or CH3. It is disabled when set with CH2 or CH4. Setting range: -100.0 to 100.0 °C (-180.0 to 180.0 °F) when DC current and DC voltage input -1000 to 1000	When input code M is specified: 0.0 °C (°F) When input code A, V is specified: 0
Proportional gain 2 DOF coefficient (α) setting	CH1 CH2 CH3 CH4	013C 013D 013E 013F	Set the proportional gain 2 DOF coefficient (α) setting. Refer to “14.1.1 2 DOF PID C ontrol (14-2)”. **When select “1: Fast-PID control”, “2: Slow-PID control”, “3: ON-OFF control”, or “4: Gap-PID control” in control action, do not change this setting item.** Setting range: 0.00 to 1.00	0.40
Integral 2 DOF coefficient (β) setting	CH1 CH2 CH3 CH4	0140 0141 0142 0143	Set the integral 2 DOF coefficient (β) setting. Refer to “14.1.1 2 DOF PID C ontrol (14-2)”. **When select “1: Fast-PID control”, “2: Slow-PID control”, “3: ON-OFF control”, or “4: Gap-PID control” in control action, do not change this setting item.** Setting range: 0.00 to 10.00	1.35
Derivative 2 DOF coefficient (γ, Cd) setting	CH1 CH2 CH3 CH4	0144 0145 0146 0147	Set the derivative 2-DOF coefficient (γ, Cd) setting. **Do not change this setting item.** Setting range: 0.00 to 1.00	0.00
SV proportional coefficient (Cp) setting	CH1 CH2 CH3 CH4	0148 0149 014A 014B	Set the SV proportional coefficient (Cp) setting. **Do not change this setting item.** Setting range: 0.00 to 1.00	1.00

Setting item	Channel	Address [HEX]	Description, setting range and selection item	Factory default
Gap width setting	CH1 CH2 CH3 CH4	014C 014D 014E 014F	Set the gap width setting. Proportional band × Gap width Setting range: 0.0 to 10.0 %	0.0 %
Gap coefficient setting	CH1 CH2 CH3 CH4	0150 0151 0152 0153	Set the gap coefficient setting. Setting range: 0.0 to 1.0	1.0
MV bias setting	CH1 CH2 CH3 CH4	0098 0099 009A 009B	Set the MV bias setting. Refer to “14.2.3 MV Bias (14-6)”. Setting range: 0.0 to 100.0 %	0.0 %

8.2.4 Alarm Parameters Setting

Set the alarm parameters such as Alarm 1 to 4 type selection, Alarm 1 to 4 setting and Alarm 1 to 4 hysteresis setting.

Click [Normal setting] of [Main screen] tab → [Alarm setting].

Display the Alarm setting screen.

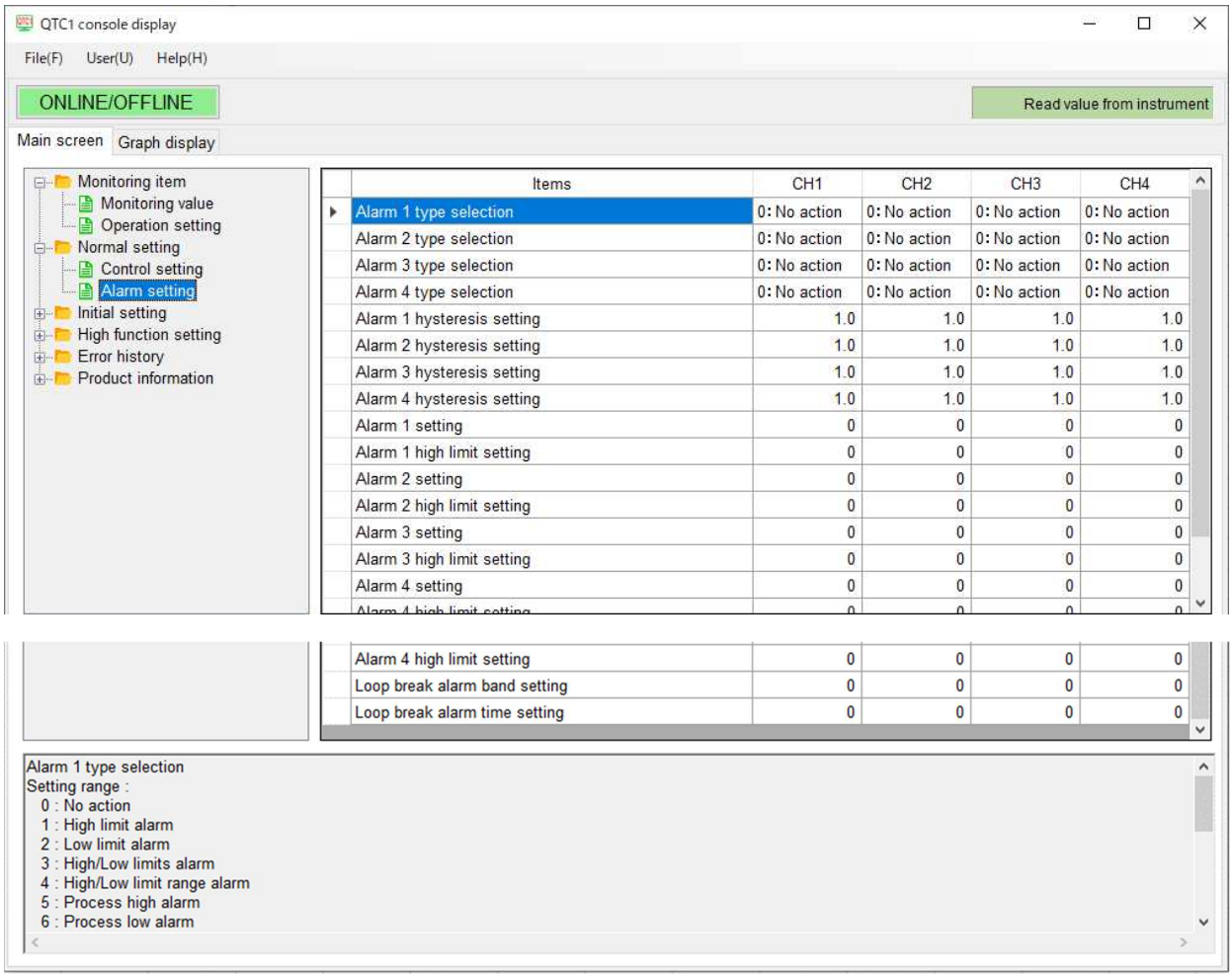

(Fig. 8.2.4-1)

Setting item	Channel	Address [HEX]	Description, setting range and selection item	Factory default
Alarm 1 type selection	CH1 CH2 CH3 CH4	0038 0039 003A 003B	Select the alarm 1 type. Refer to “14.5.3 Alarm Operation D iagram (14-31)”. Selection item: 0: No action 1: High limit alarm 2: Lowh limit alarm 3: High/Low limits alarm 4: High/Low limit s range 5: Process High alarm 6: Process low alarm 7: High limit with standby 8: Low limit with standby 9: High/Low limits alarm with 10: High/Low limits alarm individually 11: High/Low limit s range alarm individually 12: High/Low limits alarm with standby individually	0: No action
Alarm 2 type selection	CH1 CH2 CH3 CH4	003C 003D 003E 003F	Select the alarm 2 type. Refer to “14.5.3 Alarm Operation D iagram (14-31)”. Selection item: 0: No action 1: High limit alarm 2: Lowh limit alarm 3: High/Low limits alarm 4: High/Low limit s range 5: Process High alarm 6: Process low alarm 7: High limit with standby 8: Low limit with standby 9: High/Low limits alarm with 10: High/Low limits alarm individually 11: High/Low limit s range alarm individually 12: High/Low limits alarm with standby individually	0: No action

Setting item	Channel	Address [HEX]	Description, setting range and selection item	Factory default
Alarm 3 type selection	CH1 CH2 CH3 CH4	0040 0041 0042 0043	Select the alarm 3 type. Refer to “14.5.3 Alarm Operation D iagram (14-31)”. Selection item: 0: No action 1: High limit alarm 2: Lowh limit alarm 3: High/Low limits alarm 4: High/Low limit s range 5: Process High alarm 6: Process low alarm 7: High limit with standby 8: Low limit with standby 9: High/Low limits alarm with 10: High/Low limits alarm individually 11: High/Low limit s range alarm individually 12: High/Low limits alarm with standby individually	0: No action
Alarm 4 type selection	CH1 CH2 CH3 CH4	0044 0045 0046 0047	Select the alarm 4 type. Refer to “14.5.3 Alarm Operation D iagram (14-31)”. Selection item: 0: No action 1: High limit alarm 2: Lowh limit alarm 3: High/Low limits alarm 4: High/Low limit s range 5: Process High alarm 6: Process low alarm 7: High limit with standby 8: Low limit with standby 9: High/Low limits alarm with 10: High/Low limits alarm individually 11: High/Low limit s range alarm individually 12: High/Low limits alarm with standby individually	0: No action

Setting item	Channel	Address [HEX]	Description, setting range and selection item	Factory default
Alarm 1 hysteresis setting	CH1 CH2 CH3 CH4	0048 0049 004A 004B	Set the alarm 1 hysteresis setting. Refer to “14.5.3 Alarm Operation D iagram (14-31)”. Setting range: 0.1 to 1000.0 °C (0.1 to 1800.0 °F) when DC current and DC voltage input 1 to 10000	When input code M is specified: 10 °C (18 °F) When input code A, V is specified: 10
Alarm 2 hysteresis setting	CH1 CH2 CH3 CH4	004C 004D 004E 004F	Set the alarm 2 hysteresis setting. Refer to “14.5.3 Alarm Operation D iagram (14-31)”. Setting range: 0.1 to 1000.0 °C (0.1 to 1800.0 °F) when DC current and DC voltage input 1 to 10000	When input code M is specified: 10 °C (18 °F) When input code A, V is specified: 10
Alarm 3 hysteresis setting	CH1 CH2 CH3 CH4	0050 0051 0052 0053	Set the alarm 3 hysteresis setting. Refer to “14.5.3 Alarm Operation D iagram (14-31)”. Setting range: 0.1 to 1000.0 °C (0.1 to 1800.0 °F) when DC current and DC voltage input 1 to 10000	When input code M is specified: 10 °C (18 °F) When input code A, V is specified: 10
Alarm 4 hysteresis setting	CH1 CH2 CH3 CH4	0054 0055 0056 0057	Set the alarm 4 hysteresis setting. Refer to “14.5.3 Alarm Operation D iagram (14-31)”. Setting range: 0.1 to 1000.0 °C (0.1 to 1800.0 °F) when DC current and DC voltage input 1 to 10000	When input code M is specified: 10 °C (18 °F) When input code A, V is specified: 10
Alarm 1 setting	CH1 CH2 CH3 CH4	0058 0059 005A 005B	Set the alarm 1 setting. Refer to “14.5.3 Alarm Operation D iagram (14-31)”. When High/Low limits alarm individually, High/Low limits s range alarm individually or High/Low limits alarm with standby individually is selected in Alarm 1 type selection, the lower limit value of alarm 1 is set. Setting range: Refer to “Alarm 1 to 4 value setting range table (8-22)”.	When input code M is specified: 0 °C (°F) When input code A, V is specified: 0

Setting item	Channel	Address [HEX]	Description, setting range and selection item	Factory default
Alarm 1 high limit setting	CH1 CH2 CH3 CH4	005C 005D 005E 005F	Set the alarm 1 high limit setting. Refer to “14.5.3 Alarm Operation D iagram (14-31)”. When High/Low limits alarm individually, High/Low limits s range alarm individually or High/Low limits alarm with standby individually is selected in Alarm 1 type selection, this setting is valid Setting range: Refer to “Alarm 1 to 4 value setting range table (8-22)”.	When input code M is specified: 0 °C (°F) When input code A, V is specified: 0
Alarm 2 setting	CH1 CH2 CH3 CH4	0060 0061 0062 0063	Set the alarm 2 setting. Refer to “14.5.3 Alarm Operation Diagram (14-31)”. When High/Low limits alarm individually, High/Low limits s range alarm individually or High/Low limits alarm with standby individually is selected in Alarm 2 type selection, the lower limit value of alarm 2 is set. Setting range: Refer to “Alarm 1 to 4 value setting range table (8-22)”.	When input code M is specified: 0 °C (°F) When input code A, V is specified: 0
Alarm 2 high limit setting	CH1 CH2 CH3 CH4	0064 0065 0066 0067	Set the alarm 2 high limit setting. Refer to “14.5.3 Alarm Operation Diagram (14-31)”. When High/Low limits alarm individually, High/Low limits s range alarm individually or High/Low limits alarm with standby individually is selected in Alarm 2 type selection, this setting is valid Setting range: Refer to “Alarm 1 to 4 value setting range table (8-22)”.	When input code M is specified: 0 °C (°F) When input code A, V is specified: 0

Setting item	Channel	Address [HEX]	Description, setting range and selection item	Factory default
Alarm 3 setting	CH1 CH2 CH3 CH4	0068 0069 006A 006B	Set the alarm 3 setting. Refer to “14.5.3 Alarm Operation Diagram (14-31)”. When High/Low limits alarm individually, High/Low limits s range alarm individually or High/Low limits alarm with standby individually is selected in Alarm 3 type selection, the lower limit value of alarm 3 is set. Setting range: Refer to “Alarm 1 to 4 value setting range table (8-22)”.	When input code M is specified: 0 °C (°F) When input code A, V is specified: 0
Alarm 3 high limit setting	CH1 CH2 CH3 CH4	006C 006D 006E 006F	Set the alarm 3 high limit setting. Refer to “14.5.3 Alarm Operation Diagram (14-31)”. When High/Low limits alarm individually, High/Low limits s range alarm individually or High/Low limits alarm with standby individually is selected in Alarm 3 type selection, this setting is valid Setting range: Refer to “Alarm 1 to 4 value setting range table (8-22)”.	When input code M is specified: 0 °C (°F) When input code A, V is specified: 0
Alarm 4 setting	CH1 CH2 CH3 CH4	0070 0071 0072 0073	Set the alarm 4 setting. Refer to “14.5.3 Alarm Operation Diagram (14-31)”. When High/Low limits alarm individually, High/Low limits s range alarm individually or High/Low limits alarm with standby individually is selected in Alarm 4 type selection, the lower limit value of alarm 4 is set. Setting range: Refer to “Alarm 1 to 4 value setting range table (8-22)”.	When input code M is specified: 0 °C (°F) When input code A, V is specified: 0

Setting item	Channel	Address [HEX]	Description, setting range and selection item	Factory default
Alarm 4 high limit setting	CH1 CH2 CH3 CH4	0074 0075 0076 0077	Set the alarm 4 high limit setting. Refer to “14.5.3 Alarm Operation Diagram (14-31)”. When High/Low limits alarm individually, High/Low limits s range alarm individually or High/Low limits alarm with standby individually is selected in Alarm 4 type selection, this setting is valid Setting range: Refer to “Alarm 1 to 4 value setting range table (8-22)”.	When input code M is specified: 0 °C (°F) When input code A, V is specified: 0
Loop break alarm band setting	CH1 CH2 CH3 CH4	007C 007D 007E 007F	Set the alarm band for judging loop break. Refer to “14.2.6 Loop Break Alarm (14-8)”. Setting range: 0 to 150 °C (0 to 270 °F) or 0.0 to 150.0 °C (0.0 to 270.0 °F) when DC current and DC voltage input 0 to 1500	When input code M is specified: 0 °C (°F) When input code A, V is specified: 0
Loop break alarm time setting	CH1 CH2 CH3 CH4	0080 0081 0082 0083	Set the alarm time for judging loop break. Refer to “14.2.6 Loop Break Alarm (14-8)”. Setting range: 0 to 200 minutes	0 minutes

Alarm 1 to 4 value setting range table

Alarm type	Setting range
No action	
High limit alarm	-(Input span) to Input span (*1)
Lowh limit alarm	-(Input span) to Input span (*1)
High/Low limits alarm	0 to Input span (*1)
High/Low limit s range	0 to Input span (*1)
Process High alarm	Input range lower limit to Input range high limit (*2)
Process low alarm	Input range lower limit to Input range high limit (*2)
High limit with standby	-(Input span) to Input span (*1)
Low limit with standby	-(Input span) to Input span (*1)
High/Low limits alarm with	0 to Input span (*1)
High/Low limits alarm individually	0 to Input span (*1)
High/Low limit s range alarm individually	0 to Input span (*1)
High/Low limits alarm with standby individually	0 to Input span (*1)

(*1): When DC current input and DC voltage input, the input span is the scaling width.

(*2): When DC current input and DC voltage input, the Input range lower limit is the scaling lower limit, and the Input range high limit is the scaling high limit.

8.2.5 Input Setting

Set the input parameters such as input type, temperature unit and input sampling cycle.

Click [Initial setting] of [Main screen] tab → [Input setting].

Display the Input setting screen.

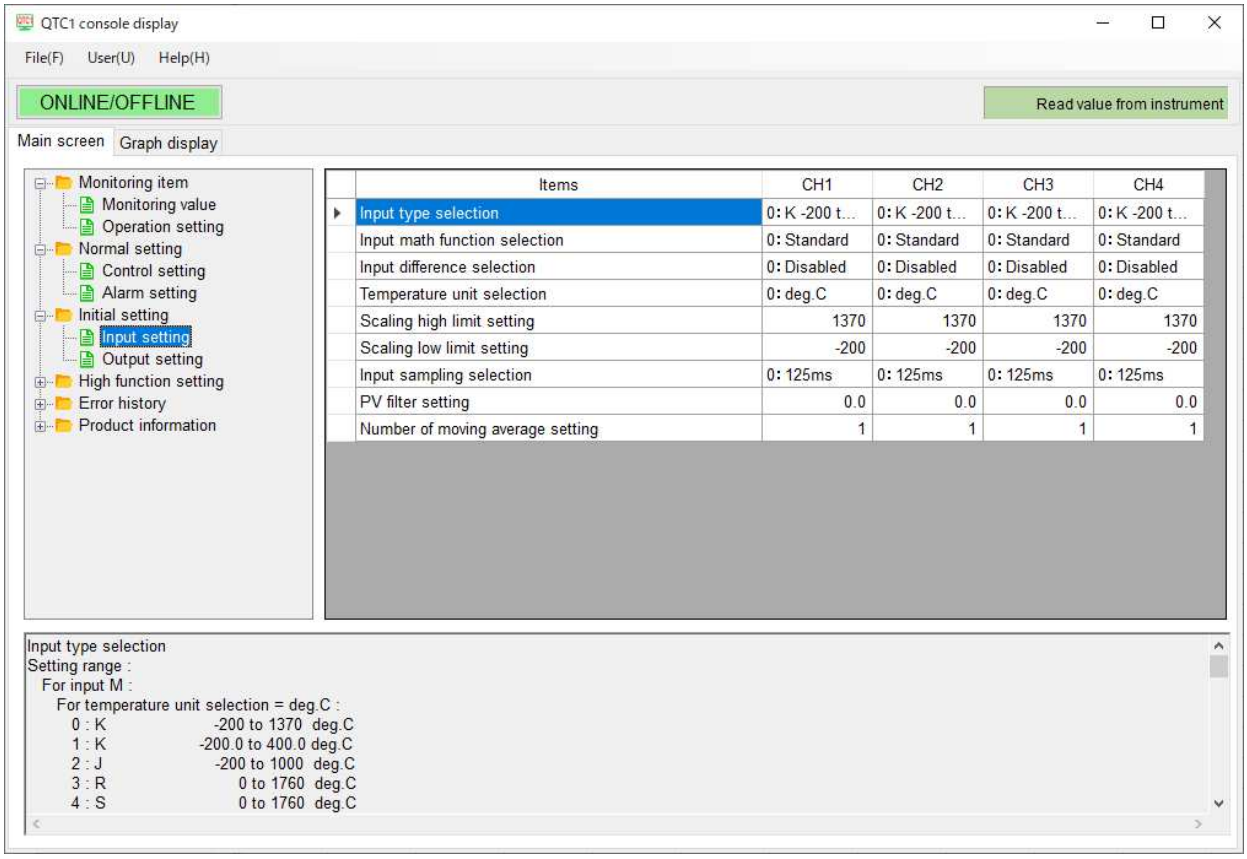

(Fig. 8.2.5-1)

Setting item	Channel	Address [HEX]	Description, setting range and selection item	Factory default
Input type selection (When input code M is specified)	CH1 CH2 CH3 CH4	00C8 00C9 00CA 00CB	Select the input type. Selection item: 0: K -200 to 1370 °C 1: K -200.0 to 400.0 °C 2: J -200 to 1000 °C 3: R 0 to 1760 °C 4: S 0 to 1760 °C 5: B 0 to 1820 °C 6: E -200 to 800 °C 7: T -200.0 to 400.0 °C 8: N -200 to 1300 °C 9: PL-Ⅱ 0 to 1390 °C 10: C(W/Re5-26) 0 to 2315 °C 11: Pt100 -200.0 to 850.0 °C 12: 0 to 1 V DC -2000 to 10000 13: 4 to 20 mA DC -2000 to 10000 14: 0 to 20 mA DC -2000 to 10000	0: K -200 to 1370 °C
Input type selection (When input code A is specified)	CH1 CH2 CH3 CH4	00C8 00C9 00CA 00CB	Select the input type. Selection item: 0: 4 to 20 mA DC (Built in receiving resistor) -2000 to 10000 1: 0 to 20 mA DC (Built in receiving resistor) -2000 to 10000	0: 4 to 20 mA DC (Built in receiving resistor) -2000 to 10000
Input type selection (When input code V is specified)	CH1 CH2 CH3 CH4	00C8 00C9 00CA 00CB	Select the input type. Selection item: 0: 0 to 5 V DC -2000 to 10000 1: 1 to 5 V DC -2000 to 10000 2: 0 to 10 V DC -2000 to 10000	0: 0 to 5 V DC -2000 to 10000
Input math function selection	CH1 CH2 CH3 CH4	012C 012D 012E 012F	Select the input math function. Refer to “14.3.3 Input Math Function (14-23)”. Selection item: 0: Standard 1: Difference input [(CH1-CH2) or (CH3-CH4)](*) 2: Addition input [(CH1+CH2) or (CH3+CH4)](*) (*): Select CH1 or CH3 for differential input and addition input. It is disabled when set with CH2 or CH4.	0: Standard

Setting item	Channel	Address [HEX]	Description, setting range and selection item	Factory default
Input difference selection	CH1 CH2 CH3 CH4	0130 0131 0132 0133	Select the Select the channel for which the input difference detection function detects the input difference from the local channel. Selection item: 0: Disable 1: CH1 2: CH2 3: CH3 4: CH4	0: Disable
Temperature unit selection	CH1 CH2 CH3 CH4	00CC 00CD 00CE 00CF	Select the temperature unit. Valid when input code M is specified. Selection item: 0: deg. C 1: deg. F	0: deg. C
Scaling high limit setting (*)	CH1 CH2 CH3 CH4	00D0 00D1 00D2 00D3	Set the scaling high limit. Setting range: Scaling lowh limit to Rated high limit	Rated high limit
Scaling low limit setting (*)	CH1 CH2 CH3 CH4	00D4 00D5 00D6 00D7	Set the scaling low limit. Setting range: Rated low limit to Scaling high limit	Rated low limit
Input sampling selection	CH1 CH2 CH3 CH4	00D8 00D9 00DA 00DB	Select the input sampling cycle. Selection item: 0: 125 ms 1: 50 ms 2: 20 ms It is fixed at 125 ms for thermocouple input and RTD input. If select a value other than 125 ms, it will be invalid.	125 ms
PV filter setting	CH1 CH2 CH3 CH4	008C 008D 008E 008F	Set the PV filter time constant. Refer to “14.4.4 PV Filter Time Constant (14-25)”. Setting range: 0.0 to 10.0 seconds	0.0 seconds

Setting item	Channel	Address [HEX]	Description, setting range and selection item	Factory default
Number of moving average setting	CH1 CH2 CH3 CH4	0108 0109 010A 010B	Set the number of moving averages that average the input values. The input values are averaged the set number of times, and the input values are exchanged every input sampling cycle. If set 1 time, the moving average will not be performed. Setting range: 1 to 10 times	1 time

(*): For thermocouple input and RTD input, the scaling high limit is the SV high limit and the scaling low limit is the SV low limit.
When the scaling high limit value and scaling low limit value are set to the same value, the control output turns OFF.

8.2.6 Output Setting

Set the output parameters such as direct/reverse action, proportional cycle and ON/OFF hysteresis.

Click [Monitoring item] of [Initial screen] tab → [Output setting].

Display the Output setting screen.

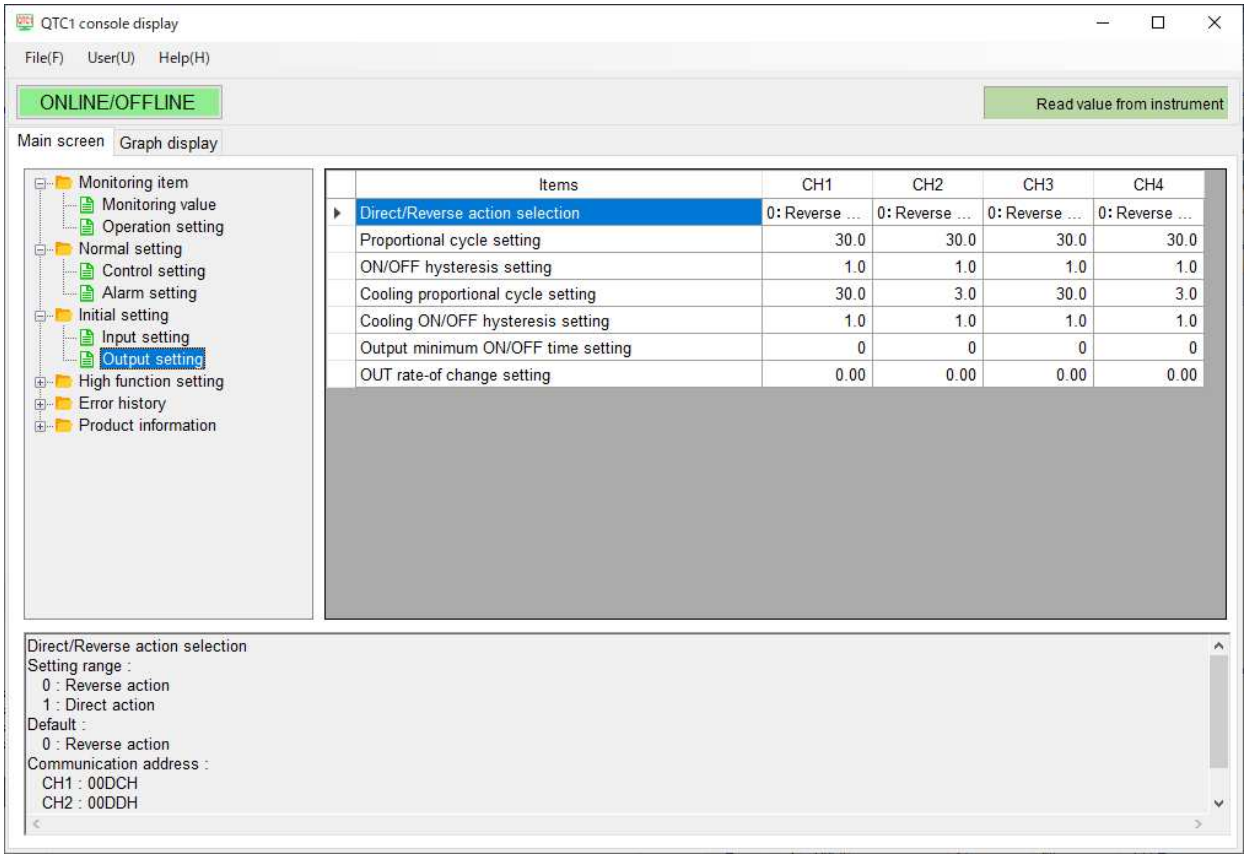

(Fig. 8.2.6-1)

Setting item	Channel	Address [HEX]	Description, setting range and selection item	Factory default
Direct/ Reverse action selection	CH1 CH2 CH3 CH4	00DC 00DD 00DE 00DF	Select the direct action or reverse action. Selection item: 0: Reverse action 1: Direct action	0: Reverse action
Proportional cycle setting	CH1 CH2 CH3 CH4	0028 0029 002A 002B	Set the proportional cycle. When “1: Heating/Cooling Control” is selected in control function selection, the heating side proportional band setting is set. Setting range: 0.1 to 100.0 seconds	Relay contact output: 30.0 seconds Non-contact voltage output, open collector output, triac output: 3.0 seconds DC current output, DC voltage output: None
ON/OFF hysteresis setting	CH1 CH2 CH3 CH4	002C 002D 002E 002F	Set the ON/OFF hysteresis. When “1: Heating/Cooling Control” is selected in control function selection, the heating side ON/OFF hysteresis setting is set. Setting range: 0.1 to 1000.0 °C (0.1 to 1800.0 °F) when DC current and DC voltage input 1 to 10000	When input code M is specified: 1.0 °C (1.8 °F) When input code A, V is specified: 10
Cooling proportional cycle setting	CH1 CH2 CH3 CH4	01A0 01A1 01A2 01A3	Set the cooling proportional cycle. This is valid when "1: Heating/Cooling Control" is selected in control function selection. Set with CH1 or CH3. It is disabled when set with CH2 or CH4. Setting range: 0.1 to 100.0 seconds	Relay contact output: 30.0 seconds Non-contact voltage output, open collector output, triac output: 3.0 seconds DC current output, DC voltage output: None

Setting item	Channel	Address [HEX]	Description, setting range and selection item	Factory default
Cooling ON/OFF hysteresis setting	CH1 CH2 CH3 CH4	01A4 01A5 01A6 01A7	Set the cooling ON/OFF hysteresis. This is valid when "1: Heating/Cooling Control" is selected in control function selection. Set with CH1 or CH3. It is disabled when set with CH2 or CH4. Setting range: 0.1 to 1000.0 °C (0.1 to 1800.0 °F) when DC current and DC voltage input 1 to 10000	When input code M is specified: 1.0 °C (1.8 °F) When input code A, V is specified: 10
Output minimum ON/OFF time setting	CH1 CH2 CH3 CH4	0154 0155 0156 0157	Set the time to turn the output on or off without depending on the MV. Refer to “14.2.4 Output Minimum ON/OFF Time (14-7)”. Setting range: 0 to 1000 ms	0 ms
Output rate-of change setting	CH1 CH2 CH3 CH4	01CC 01CD 01CE 01CF	Set the output change rate limit. Refer to “14.2.13 Output Rate-of Change Limit (14-10)”. Setting range: 0.00 to 100.00 %/seconds	0.00 %/seconds

8.2.7 Standard Function Setting

Set the standard function parameters such as control function and cooling action mode.

Click [High function setting] of [Main screen] tab → [Standard function setting].

Display the Standard function setting screen.

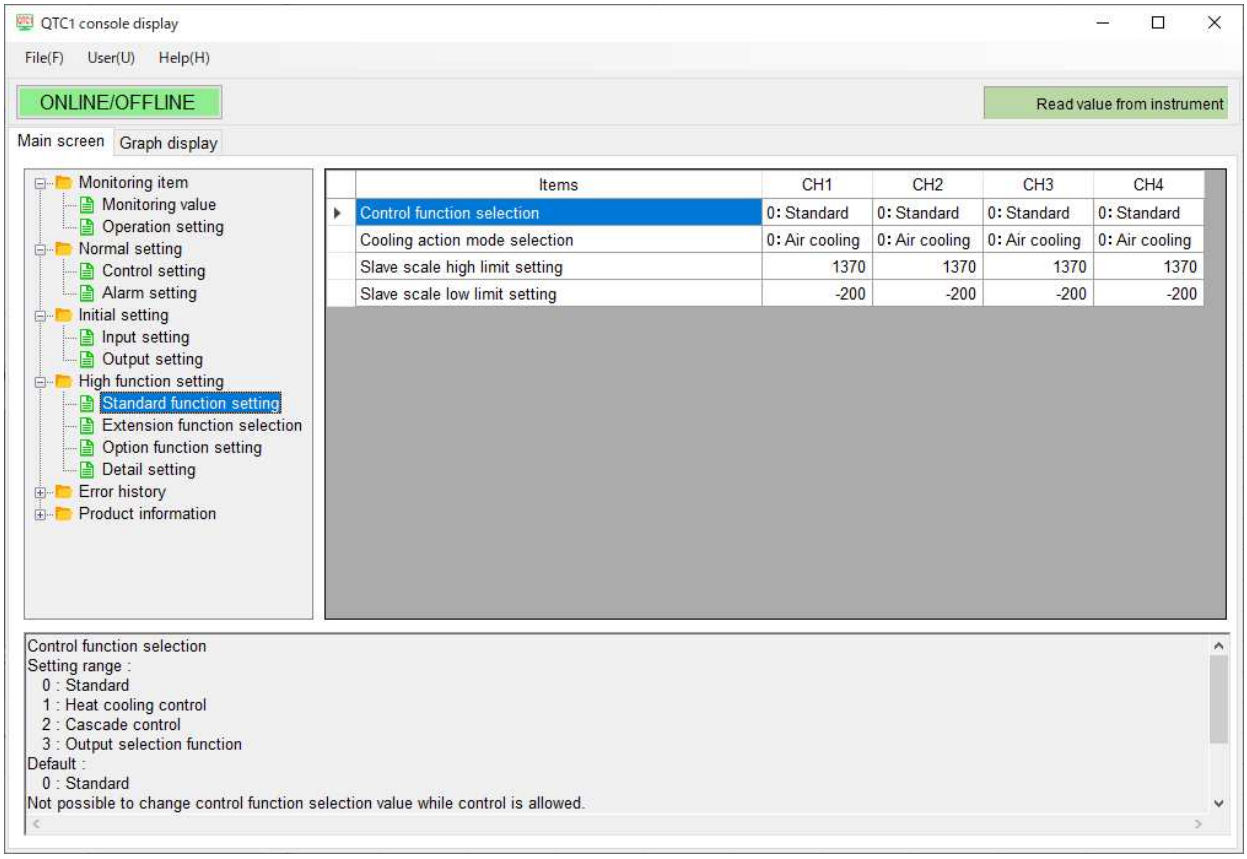

(Fig. 8.2.7-1)

Setting item	Channel	Address [HEX]	Description, setting range and selection item	Factory default
Control function selection	CH1 CH2 CH3 CH4	0190 0191 0192 0193	Select the conntorol function. This can be selected only when control is prohibited. Refer to “14.2.14 Control Function (14-11)”. Selection item: 0: Standard 1: Heating/Cooling control (*) 2: Cascade control (*) 3: Output selection function (*): Select Heating/Cooling Control and Cascade control for CH1 or CH3. It is invalid when CH2 or CH4 is selected.	0: Standard
Cooling action mode selection	CH1 CH2 CH3 CH4	01B4 01B5 01B6 01B7	Select the cooling action mode. Refer to “Heating/Cooling control (14-11)”. This is valid when "1: Heating/Cooling Control" is selected in control function selection. Set with CH1 or CH3. It is disabled when set with CH2 or CH4. Selection item: 0: Air cooling (Linear characteristics) 1: Oil cooling (1.5th power of the linear characteristics) 2: Water cooling (2nd power of the linear characteristics)	0: Air cooling
Slave scale high limit setting	CH1 CH2 CH3 CH4	01B8 01B9 01BA 01BB	Set the slave scale high limit of cascade control. Refer to “Cascade control (14-13)”. Set with CH1 or CH3. It is disabled when set with CH2 or CH4. Setting range: Slave scale low limit to Slave input range high limit	Slave input range high limit
Slave scale low limit setting	CH1 CH2 CH3 CH4	01BC 01BD 01BE 01BF	Set the slave scale low limit of cascade control. Refer to “Cascade control (14-13)”. Set with CH1 or CH3. It is disabled when set with CH2 or CH4. Setting range: Slave input range low limit to Slave scale high limit to	Slave input range low limit

8.2.8 Extension Function Selection

Select the extension function parameters such as extension function, auto balance control enabled/disabled and number of communication management module.

Click [High function setting] of [Main screen] tab → [Extension function selection].

Display the Extension function selection screen.

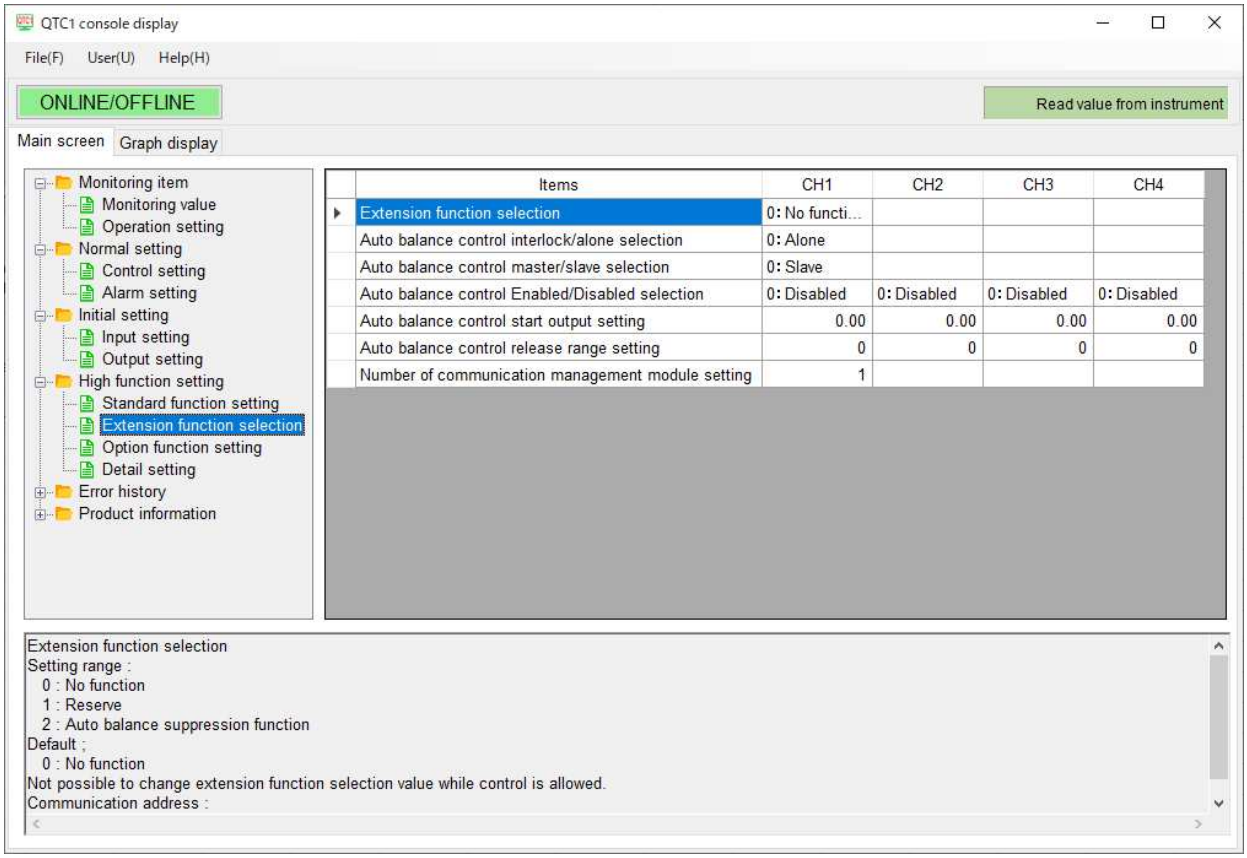

(Fig. 8.2.8-1)

Setting item	Channel	Address [HEX]	Description, setting range and selection item	Factory default
Extension function selection		01F5	Select the extension function. Refer to “14.3.1 Extension Function Selection (14-16)”. Selection item: 0: No function 1: Reservation 2: Auto balance control function	0: No function
Auto balance control Interlock/ Alone selection		01FC	Select whether to use the auto balance control function in conjunction with each other or individually. Refer to “Auto balance control function (14-16)”. Selection item: 0: Alone 1: Interlock	0: Alone
Auto balance control Master/ Slave selection		01FD	Select whether to use the autobalance control function as a master or a slave. Refer to “Auto balance control function (14-16)”. Selection item: 0: Slave channel 1: CH1 master channel 2: CH2 master channel 3: CH3 master channel 4: CH4 master channel	0: Slave
Auto balance control Enabled/ Disabled selection	CH1 CH2 CH3 CH4	01FE 01FF 0200 0201	Select whether to enable or disable the auto balance control function for each channel. Refer to “Auto balance control function (14-16)”. Selection item: 0: Disabled 1: Enabled	0: Disabled
Auto balance control start output setting	CH1 CH2 CH3 CH4	0202 0203 0204 0205	Set the MV when auto balance control starts. Refer to “Auto balance control function (14-16)”. Setting range: 0.00 to 1.00 (corresponds to 0 to 100 %)	0.00 (0 %)

Setting item	Channel	Address [HEX]	Description, setting range and selection item	Factory default
Auto balance control release range setting	CH1 CH2 CH3 CH4	0206 0207 0208 0209	Set the area to cancel the auto balance control function. When 0 is set, the auto balance control release area is twice the proportional band of the master channel. Refer to “Auto balance control function (14-16)”. Setting range: 0 to Input span °C (°F) × 10 % or 0.0 to Input span °C (°F) × 10 % when DC current and DC voltage input 0 to Scaling width × 10 %	When input code M is specified: 0 °C (°F) When input code A, V is specified: 0
Number of communication management module setting		020A	Set the number of modules managed by the master module when using the SIF function or auto balance control function. Refer to “13 Communication with PLC Using SIF Function (13-1)” or “Auto balance control function (14-16)”. Setting range: 1 to 16 modules Set the number of modules including the master module. (Example) If two slave modules are connected, set them to three.	1 module

8.2.9 Option Function Setting

Set the option function parameters such as heater burnout alarm and event input/output allocation.

Click [High function setting] of [Main screen] tab → [Option function setting].

Display the Option function setting screen.

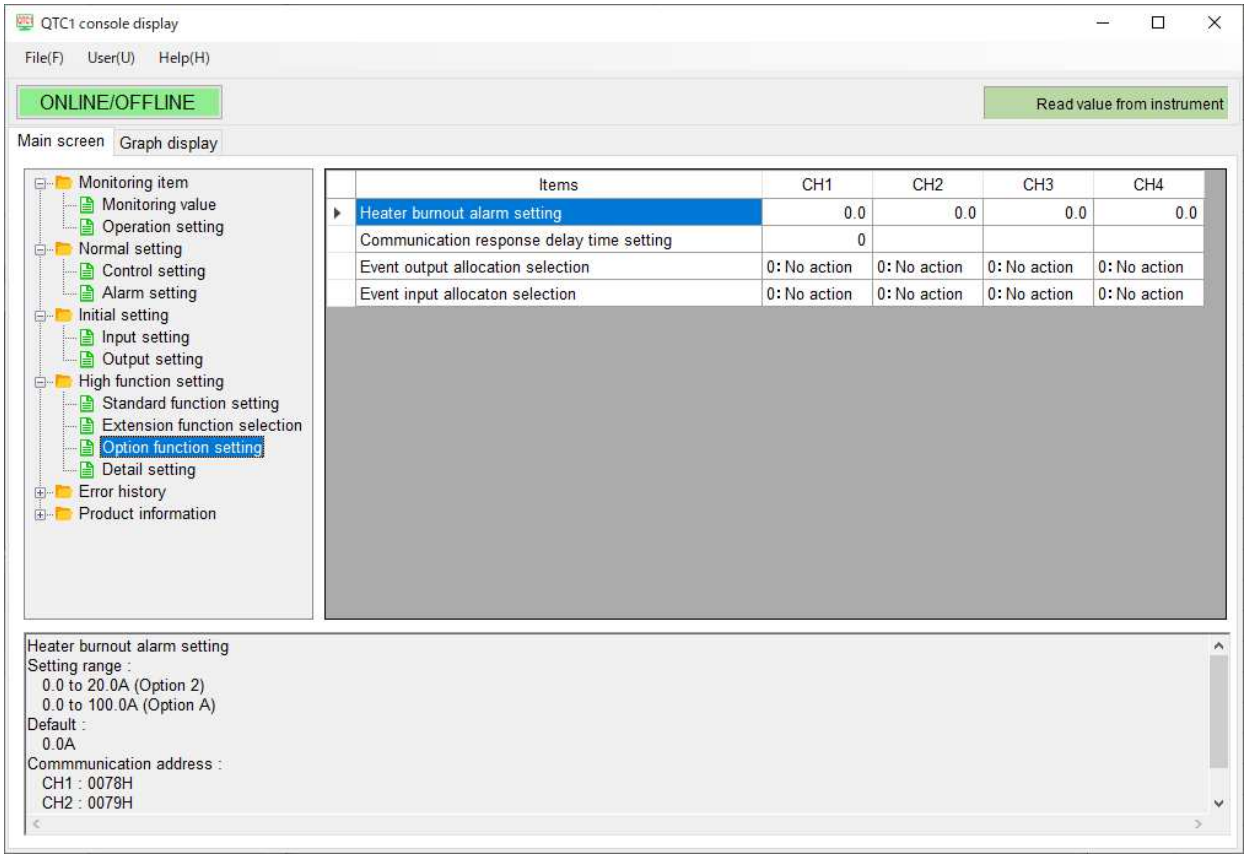

(Fig. 8.2.9-1)

Setting item	Channel	Address [HEX]	Description, setting range and selection item	Factory default
Heater burnout alarm setting	CH1 CH2 CH3 CH4	0078 0079 007A 007B	Set the heater current value to judge the heater burnout. When the heater current value (CT input current) falls below the heater burnout alarm setting value, the heater burnout alarm is activated, and when it exceeds the heater burnout alarm setting value, the heater burnout alarm is released. The heater current value is updated when the control output is ON. When the control output is OFF, the heater current value when the previous control output was ON is stored. Set a value that is approximately 80% of the heater current value in consideration of fluctuations in the power supply voltage. If 0.0 is set, the heater burnout alarm will not done. Refer to “14.5.4 Heater B urnout A larm Operation Diagram (14-16)”. Setting range: when select 20 A: 0.0 to 20.0 A when select 100 A: 0.0 to 100.0 A	0.0 A
Communication response delay time setting		01F4	Set the delay time for returning a response after receiving a command from the host. Setting range: 0 to 1000 ms	0 ms

Setting item	Channel	Address [HEX]	Description, setting range and selection item	Factory default
Event output allocation selection	CH1 CH2 CH3 CH4	00FC 00FD 00FE 00FF	Select the event output allocation. Selection item: 0: No action Any value can be output by setting a value in the event output status flag from the host. Setting the event output status flag to 0 turns off the event output, and setting it to 1 turns on the event output. 1: Event output (CH alone) The event output turns ON when any of the selected channel's alarm, heater burnout alarm, or loop error alarm is activated. 2: Event output (CH interlock) The event output turns on when an alarm, heater burnout alarm, or loop error alarm occurs on all channels.	0: No action
Event input allocation selection	CH1 CH2 CH3 CH4	0100 0101 0102 0103	Select the event input allocation. Selection item: 0: No action It can be used for any operation by reading the event input status flag. When the event input is turned off, the event input status flag is set to 0, and when the event input is turned on, the event input status flag is set to 1. 1: Control start/stop (CH alone) For the selected channel only, control will start when the event input turns ON, and control will stop when the event input turns OFF. 2: Control start/stop (CH interlock) For all channels, turning on the event input starts the control, and turning off the event input stops the control.	0: No action

8.2.10 Detail Setting

Set the detail parameters such as out high limit, out low limit, AT action mode, AT bias and restore action selection when power is turn on.

Click [High function setting] of [Main screen] tab → [Detail setting].

Display the detail setting screen.

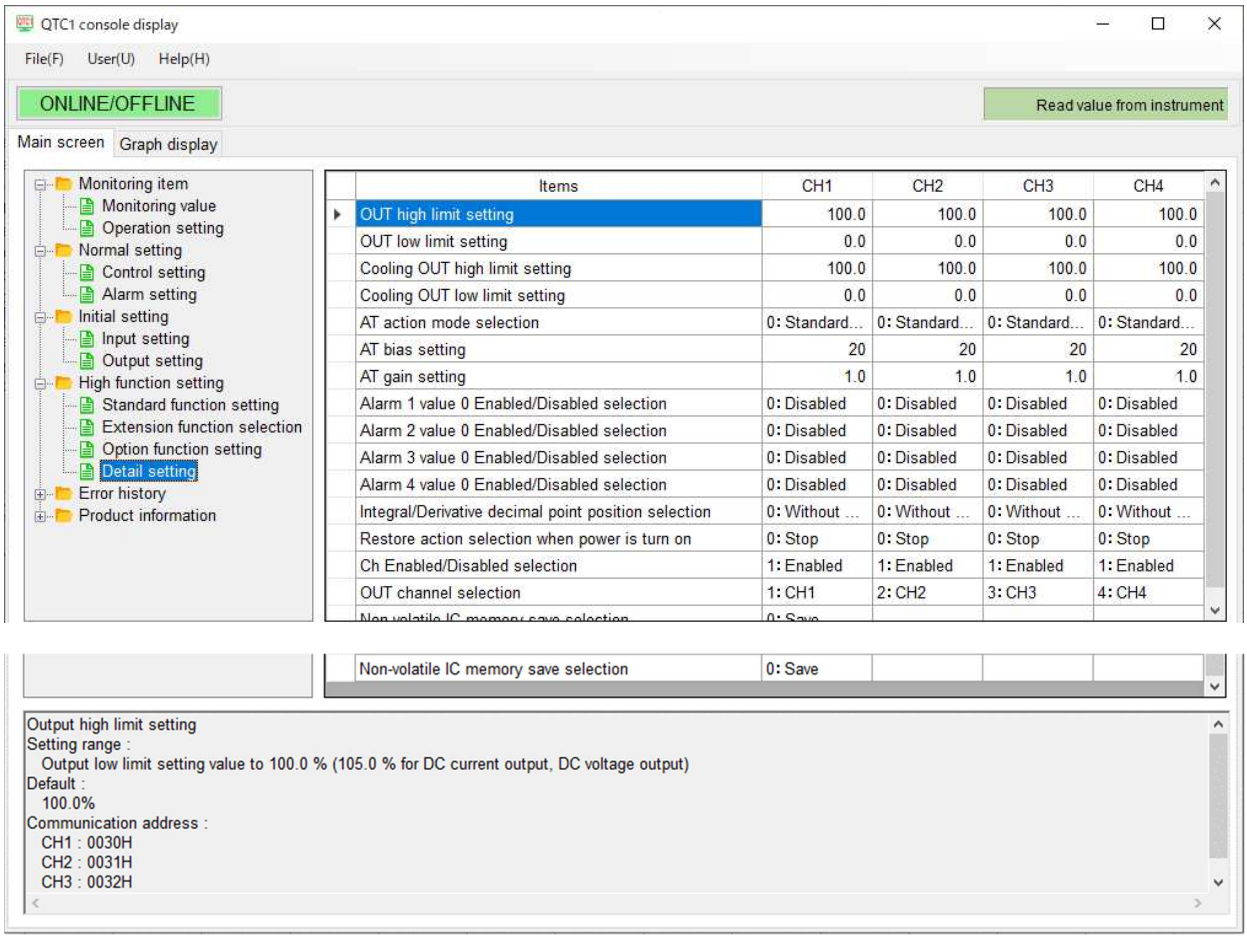

(Fig. 8.2.10-1)

Setting item	Channel	Address [HEX]	Description, setting range and selection item	Factory default
OUT high limit setting	CH1 CH2 CH3 CH4	0030 0031 0032 0033	Set the output high limit. Setting range: OUT low limit setting to 100.0 % when current output OUT low limit setting to 105.0 %	100.0 %
OUT low limit setting	CH1 CH2 CH3 CH4	0034 0035 0036 0037	Set the output low limit. Setting range: 0.0 % to OUT high limit setting when current output -5.0 % to OUT high limit setting	0.0 %
Cooling output high limit setting	CH1 CH2 CH3 CH4	01AC 01AD 01AE 01AF	Set the cooling output high limit. This is valid when "1: Heating/Cooling Control" is selected in control function selection. Set with CH1 or CH3. It is disabled when set with CH2 or CH4. Setting range: Cooling OUT low limit setting to 100.0 % when current output Cooling OUT low limit setting to 105.0 %	100.0 %
Cooling output low limit setting	CH1 CH2 CH3 CH4	01B0 01B1 01B2 01B3	Set the cooling output low limit. This is valid when "1: Heating/Cooling Control" is selected in control function selection. Set with CH1 or CH3. It is disabled when set with CH2 or CH4. Setting range: 0.0 % to Cooling OUT high limit setting when current output -5.0 % to Cooling OUT high limit setting	0.0 %
AT action mode selection	CH1 CH2 CH3 CH4	00E0 00E1 00E2 00E3	Select the AT action mode. Refer to “12.2.1 Normal AT (12-4)” and “12.2.2 Start-up AT (12-5)”. Selection item: 0: Normal AT 1: Start-up AT	0: Normal AT

Setting item	Channel	Address [HEX]	Description, setting range and selection item	Factory default
AT bias setting	CH1 CH2 CH3 CH4	00E4 00E5 00E6 00E7	Set the bias for normal AT. The AT point is automatically determined based on the deviation between PV and SV. The AT bias setting is invalid for DC current input and DC voltage input. Refer to “12.2.1 Normal AT (12-4)”. Setting range: 0 to 50 °C (0 to 90 °F) or 0.0 to 50.0 °C (0.0 to 90.0 °F)	20 °C (36 °F)
AT gain setting	CH1 CH2 CH3 CH4	00E8 00E9 00EA 00EB	Set the ratio of the proportional band calculated by executing normal AT or Start-up AT. Setting range: 0.1 to 10.0 times	1.0 times
Alarm 1 value 0 Enabled/ Disabled selection	CH1 CH2 CH3 CH4	00EC 00ED 00EE 00EF	Select whether to enable or disable the alarm action when Alarm 1 setting value is 0. Refer to “14.2.5 Alarm Output (14-8)”. Selection item: 0: Disabled 1: Enabled	0: Disabled
Alarm 2 value 0 Enabled/ Disabled selection	CH1 CH2 CH3 CH4	00F0 00F1 00F2 00F3	Select whether to enable or disable the alarm action when Alarm 2 setting value is 0. Refer to “14.2.5 Alarm Output (14-8)”. Selection item: 0: Disabled 1: Enabled	0: Disabled
Alarm 3 value 0 Enabled/ Disabled selection	CH1 CH2 CH3 CH4	00F4 00F5 00F6 00F7	Select whether to enable or disable the alarm action when Alarm 3 setting value is 0. Refer to “14.2.5 Alarm Output (14-8)”. Selection item: 0: Disabled 1: Enabled	0: Disabled
Alarm 4 value 0 Enabled/ Disabled selection	CH1 CH2 CH3 CH4	00F8 00F9 00FA 00FB	Select whether to enable or disable the alarm action when Alarm 4 setting value is 0. Refer to “14.2.5 Alarm Output (14-8)”. Selection item: 0: Disabled 1: Enabled	0: Disabled

Setting item	Channel	Address [HEX]	Description, setting range and selection item	Factory default
Integral/ Derivative decimal point position selection	CH1 CH2 CH3 CH4	0158 0159 015A 015B	Select whether the integration time or the derivative time has no decimal point or has a decimal point. Refer to “14.2.2 Integral/Derivative Decimal Point Position (14-6)”. Selection item: 0: Without decimal point 1: With decimal point	0: Without decimal point
Restore action selection when power is turn on	CH1 CH2 CH3 CH4	015C 015D 015E 015F	Select whether to resume in the continuous state (state before turning off the power) or in the stopped state when the power is turned on. Selection item: 0: Stop 1: Continuous (state before turning off the power)	0: Stop
CH Enabled/ Disabled selection	CH1 CH2 CH3 CH4	0104 0105 0106 0107	Select enable or disable for each channel. If select Disabled, all operations will be disabled for the selected channel. Also, PV becomes 0. Selection item: 0: Disabled 1: Enabled	1: Enabled
Output channel selection	CH1 CH2 CH3 CH4	01C8 01C9 01CA 01CB	Select the input channel for the output of each channel. Refer to “Output selection function (14-15)”. This is valid when output selection function is selected in control function selection (8-31). Selection item: 0: CH1 1: CH2 2: CH3 3: CH4	Input channel same as output channel
Non-volatile IC memory save selection		020B	Select whether to allow or prohibit saving data to the non-volatile IC memory. Refer to “14.2.9 Non-volatile IC Memory Data Save (14-9)”. Selection item: 0: Save 1: Not save	0: Save

9 Communication Procedure

Communication starts with command transmission from the host computer (hereafter Master), and ends with the response of this instrument (hereafter Slave).

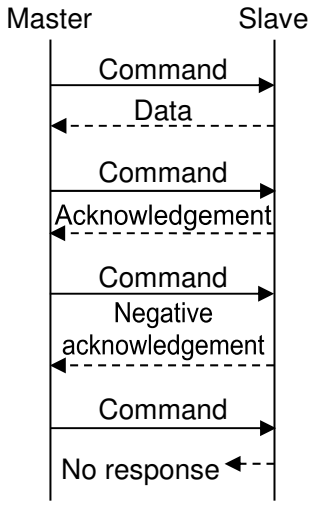

(Fig. 9-1)

- Response with data
  When the master sends the Read command, the slave responds with the corresponding set value or current status.
- Acknowledgement
  When the master sends the Write command, the slave responds by sending the acknowledgement after the processing is terminated.
- Negative acknowledgement
  When the master sends a non-existent command or value out of the setting range, the slave returns a negative acknowledgement.
- No response
  The slave will not respond to the master in the following cases:
  - Broadcast address is set.
  - Communication error (framing error, parity error)
  - CRC-16 discrepancy

Communication timing of the RS-485

Master Side (Take note while programming)

When the master starts transmission through the RS-485 communication line, the master is arranged so as to provide an idle status (mark status) transmission period of 1 or more characters before sending the command to ensure synchronization on the receiving side.

Set the program so that the master can disconnect the transmitter from the communication line within a 1 character transmission period after sending the command in preparation for reception of the response from the slave.

To avoid collision of transmissions between the master and the slave, send the next command after carefully checking that the master has received the response.

If a response to the command is not returned due to communication errors, set the Retry Processing to send the command again. (It is recommended to execute Retry twice or more.)

Slave Side

When the slave starts transmission through the RS-485 communication line, the slave is arranged so as to provide an idle status (mark status) transmission period of 1 ms or more (*) before sending the response to ensure synchronization on the receiving side.

The slave is arranged so as to disconnect the transmitter from the communication line within a 1 character transmission period after sending the response.

(*): Can be set in “Communication response delay time setting (8-36)” within a range of 0 to 1000 ms.

10 MODBUS Protocol

10.1 Transmission Mode

It becomes the RTU mode, and 8-bit binary data in command is transmitted as it is.

Data format	Start bit:	1 bit
	Data bit:	8 bits
	Parity:	Even (Odd, No parity) (Selectable)
	Stop bit:	1 bit (2 bits) (Selectable)
Error detection:		CRC-16 (Cyclic Redundancy Check)

10.2 Data Communication Interval

1.5 character transmission times or less

(Communication speed 9600 bps, 19200 bps: 1.5 character transmission times,

Communication speed 38400 bps, 57600 bps: 750 µs)

To transmit continuously, an interval between characters which consist of one message, must be within 1.5 character transmission times.

If an interval lasts longer than 1.5 character transmission times, the PCA1 assumes that transmission from the master is finished, which results in a communication error, and will not return a response.

10.3 Message Configuration

Message is configured to start after idle time is processed for more than 3.5 character transmissions, and end after idle time is processed for more than 3.5 character transmissions.

(Communication speed 9600 bps, 19200 bps: 3.5 character transmission times,

Communication speed 38400 bps, 57600 bps: 1.75 ms)

The data part has a maximum of 252 bytes.

3.5 idle characters	Slave address	Function code	Data	Error check CRC-16	3.5 idle characters

(1) Slave Address

Slave address is an individual instrument number on the slave side, and is set within the range 1 to 16 (01H to 10H). The master identifies slaves by the slave address of the requested message.

The slave informs the master which slave is responding to the master by placing its own address in the response message.

Slave address 0 (00H, Broadcast address) can identify all the slaves connected. However, slaves do not respond.

(2) Function Code

The function code is the command code for the slave to undertake one of the following actions.

Type	Function Code	Sub Function Code	Contents
Data access	03(03H)		Reads a single or multiple piece(s) of data from slave(s) (Amount of data: Max. 100).
	06(06H)		Writes a single piece of data to slave(s).
	16(10H)		Writes multiple pieces of data to slave(s) (Amount of data: Max. 100).

The function code is used to discern whether the response is normal (acknowledgement) or if any error (negative acknowledgement) has occurred when the slave returns the response message to the master.

When acknowledgement is returned, the slave simply returns the original function code.

When negative acknowledgement is returned, the MSB of the original function code is set as 1 for the response.

For example, if the master sends request message setting 13H to the function code by mistake, slave returns 93H by setting the MSB to 1, because the former is an illegal function.

For negative acknowledgement, the exception codes below are set to the data of the response message, and returned to the master in order to inform it of what kind of error has occurred.

Exception Code	Contents
1(01H)	Illegal function (Non-existent function)
2(02H)	Illegal data address (Non-existent data address)
3(03H)	Illegal data value (Value out of the setting range)
17(11H)	Status unable to be written. (AT is performing.)

(3) Data

Data differs depending on the function code.

A request message from the master is composed of a data item, amount of data and setting data.

A response message from the slave is composed of the byte count , data and exception codes in negative acknowledgements, corresponding to the request message.

The effective range of data is -32768 to 32767 (8000H to 7FFFH).

Refer to “11.1 Communication Command List (11-1 to 11-20)”.

(4) Error Check

After calculating CRC-16 (Cyclic Redundancy Check) from the slave address to the end of the data, the calculated 16-bit data is appended to the end of message in sequence from low order to high order.

[How to calculate CRC-16]

In the CRC-16 system, the information is divided by the polynomial series. The remainder is added to the end of the information and transmitted. The generation of a polynomial series is as follows.

(Generation of polynomial series: $X^{16} + X^{15} + X^{2} + 1$)

① Initialize the CRC-16 data (assumed as X) (FFFFH).

② Calculate exclusive OR (XOR) with the 1st data and X. This is assumed as X.

③ Shift X one bit to the right. This is assumed as X.

④ When a carry is generated as a result of the shift, XOR is calculated by X of ③ and the fixed value (A001H). This is assumed as X. If a carry is not generated, go to step ⑤.

⑤ Repeat steps ③ and ④ until shifting 8 times.

⑥ XOR is calculated with the next data and X. This is assumed as X.

⑦ Repeat steps ③ to ⑤.

⑧ Repeat steps ③ to ⑤ up to the final data.

⑨ Set X as CRC-16 to the end of message in sequence from low order to high order.

10.4 Message Example

Numerals written below the command represent the number of characters.

(1) Read [Slave address 1, CH1 PV (03E8H)]

- A request message from the master

Idle 3.5 characters	Slave address (01H)	Function code (03H)	Data item (03E8H)	Amount of data (0001H)	Error check CRC-16 (047AH)	Idle 3.5 characters
	1	1	2	2	2	

- Response message from the slave in normal status [When PV=600 °C (0258H)]

Idle 3.5 characters	Slave address (01H)	Function code (03H)	Response byte count (02H)	Data (0258H)	Error check CRC-16 (B8DEH)	Idle 3.5 characters
	1	1	1	2	2	

(2) Write [Slave address 1, CH1 SV (0018H)]

- A request message from the master [When SV 600 °C (0258H)]

Idle 3.5 characters	Slave address (01H)	Function code (06H)	Data item (0018H)	Data (0258H)	Error check CRC-16 (0957H)	Idle 3.5 characters
	1	1	2	2	2	

- Response message from the slave in normal status

Idle 3.5 characters	Slave address (01H)	Function code (06H)	Data item (0018H)	Data (0258H)	Error check CRC-16 (0957H)	Idle 3.5 characters
	1	1	2	2	2	

- Response message from the slave in exception (error) status (When a value out of the setting range is set)

  The function code MSB is set to 1 for the response message in exception (error) status, and 86H is returned.

  The exception code 03H (Value out of the setting range) is returned (error).

Idle 3.5 characters	Slave address (01H)	Function code (86H)	Exception code (03H)	Error check CRC-16 (0261H)	Idle 3.5 characters
	1	1	1	2	

(3) Read [Slave address 1, CH1 SV(0018H)]

- A request message from the master

Idle 3.5 characters	Slave address (01H)	Function code (03H)	Data item (0018H)	Amount of data (0001H)	Error check CRC-16 (040DH)	Idle 3.5 characters
	1	1	2	2	2	

- Response message from the slave in normal status [When SV 600 °C (0258H)]

Idle 3.5 characters	Slave address (01H)	Function code (03H)	Response byte count (02H)	Data (0258H)	Error check CRC-16 (B8DEH)	Idle 3.5 characters
	1	1	1	2	2	

- Response message from the slave in exception (error) status (When data item is incorrect)

  The function code MSB is set to 1 for the response message in exception (error) status, and 83H is returned.

  The exception code 02H (Non-existent data address) is returned (error).

Idle 3.5 characters	Slave address (01H)	Function code (83H)	Exception code (02H)	Error check CRC-16 (C0F1H)	Idle 3.5 characters
	1	1	1	2	

(4) Write 4 commands [Slave address 1, CH1 SV (0018H) to CH4 SV (001BH)]

(Writing multiple pieces of data)

The configuration of the data is as follows.

Amount of data : 4(0004H)

Byte count : 8(08H)

Data : Data is converted to Hexadecimal.

Data Item		Data	Data (Converted to Hexadecimal)
0018H	CH1 SV setting	600 °C	0258H
0019H	CH2 SV setting	600 °C	0258H
001AH	CH3 SV setting	600 °C	0258H
001BH	CH4 SV setting	600 °C	0258H

- A request message from the master (When writing the above data)

Idle 3.5 characters	Slave address (01H)	Function code (10H)	Data item (0018H)	Data (000408025802580258 0258H)	
	1	1	2	11	

	Error check CRC-16 (6E98H)	Idle 3.5 characters
	2	

• Response message from the slave in normal status

Idle 3.5 characters	Slave address (01H)	Function code (10H)	Data item (0018H)	Data (0004H)	Error check CRC-16 (41CDH)	Idle 3.5 characters
	1	1	2	2	2	

(5) Read 4 commands [Slave address 1, CH1 SV (0018H) to CH4 SV (001BH)]

(Reading multiple pieces of data)

• A request message from the master (When reading the above data)

Idle 3.5 characters	Slave address (01H)	Function code (03H)	Data item (0018H)	Amount of data (0004H)	Error check CRC-16 (C40EH)	Idle 3.5 characters
	1	1	2	2	2	

• Response message from the slave in normal status

Idle 3.5 characters	Slave address (01H)	Function code (03H)	Response byte count (08H)	Data (0258025802580258H)	
	1	1	1	8	

	Error check CRC-16 (6D15H)	Idle 3.5 characters
	2	

The data the response message is as follows.

Data Item		Data	Data (Converted to Hexadecimal)
0018H	CH1 SV setting	600 °C	0258H
0019H	CH2 SV setting	600 °C	0258H
001AH	CH3 SV setting	600 °C	0258H
001BH	CH4 SV setting	600 °C	0258H

11 Communication Command List

11.1 Communication Command List

This section explains each item of communication command.

- Data Item
  This is a setting item for the control module QTC1-4.
- Amount of data
  The amount of data that can be handled by each data item.
  The amount of setting items for each channel is 4.
  The amount of setting items for each module is 1.
- Channel
  This is a channel number of the control module QTC1-4.
- Address [HEX (Hexadecimal), DEC (Decimal)]
  This is an each channel address of the control module QTC1-4.
- Attribute
  R/W: Read and write (Host ←→ Control module QTC1-4)
  RO: Read only (Host ← Control module QTC1-4)
- Data
  This is an explanation of the setting range and setting conditions for each data.

Data Item	Amount of data:	Channel	Address HEX	Address DEC	Attribute	Data
System	4	CH1 CH2 CH3 CH4	0000 0001 0002 0003	0 1 2 3		**This is a system item for internal processing. Please do not use.**
Control Allowed/ Prohibited selection	4	CH1 CH2 CH3 CH4	0004 0005 0006 0007	4 5 6 7	R/W	0000H: Control Prohibited 0001H: Control Allowed
AT Perform/Cancel selection	4	CH1 CH2 CH3 CH4	0008 0009 000A 000B	8 9 10 11	R/W	0000H: AT cancel 0001H: AT perform
Event output ON/OFF selection	4	CH1 CH2 CH3 CH4	000C 000D 000E 000F	12 13 14 15	R/W	0000H: Event output OFF 0001H: Event output ON
Auto/Manual control selection	4	CH1 CH2 CH3 CH4	0010 0011 0012 0013	16 17 18 19	R/W	0000H: Automatic control 0001H: Manual control
Manual MV setting (*)	4	CH1 CH2 CH3 CH4	0014 0015 0016 0017	20 21 22 23	R/W	-5.0 to 105.0 %
SV setting	4	CH1 CH2 CH3 CH4	0018 0019 001A 001B	24 25 26 27	R/W	Scaling low limit to Scaling high limit
Proportional band setting	4	CH1 CH2 CH3 CH4	001C 001D 001E 001F	28 29 30 31	R/W	1 to Input span °C (°F) or 0.1 to Input span °C (°F) For DC current input and DC voltage input: 0.10 to 100.00 %
Integral time setting	4	CH1 CH2 CH3 CH4	0020 0021 0022 0023	32 33 34 35	R/W	0 to 3600 seconds or 0.0 to 2000.0 seconds For “2: Slow-PID control” is selected in control action: 1 to 3600 seconds or 0.1 to 2000.0 seconds
Derivative time setting	4	CH1 CH2 CH3 CH4	0024 0025 0026 0027	36 37 38 39	R/W	0 to 3600 seconds or 0.0 to 2000.0 seconds
Proportional cycle setting	4	CH1 CH2 CH3 CH4	0028 0029 002A 002B	40 41 42 43	R/W	0.1 to 100.0 seconds

(*): This is valid when the manual control is selected in “Auto/Manual control”.
When automatic control is selected, negative acknowledgment is returned.

Data Item	Amount of data:	Channel	Address HEX	Address DEC	Attribute	Data
ON/OFF hysteresis setting	4	CH1 CH2 CH3 CH4	002C 002D 002E 002F	44 45 46 47	R/W	0.1 to 1000.0 °C (0.1 to 1800.0 °F) For DC current input and DC voltage input: 1 to 10000
Output high limit setting	4	CH1 CH2 CH3 CH4	0030 0031 0032 0033	48 49 50 51	R/W	Output low limit to 100.0 % For current output: Output low limit to 105.0 %
Output low limit setting	4	CH1 CH2 CH3 CH4	0034 0035 0036 0037	52 53 54 55	R/W	0.0 % to output high limit For current output: -5.0 % to output high limit
Alarm 1 type selection	4	CH1 CH2 CH3 CH4	0038 0039 003A 003B	56 57 58 59	R/W	0000H: No event 0001H: High limit alarm 0002H: Low limit alarm 0003H: High/Low limits alarm 0004H: High/Low limits range alarm 0005H: Process high alarm 0006H: Process low alarm 0007H: High limit with standby 0008H: Low limit with standby 0009H: High/Low limits alarm with standby 000AH: High/Low limits alarm individually 000BH: High/Low limits range alarm individually 000CH: High/Low limits alarm with standby individually
Alarm 2 type selection	4	CH1 CH2 CH3 CH4	003C 003D 003E 003F	60 61 62 63	R/W	
Alarm 3 type selection	4	CH1 CH2 CH3 CH4	0040 0041 0042 0043	64 65 66 67	R/W	
Alarm 4 type selection	4	CH1 CH2 CH3 CH4	0044 0045 0046 0047	68 69 70 71	R/W	
Alarm 1 hysteresis setting	4	CH1 CH2 CH3 CH4	0048 0049 004A 004B	72 73 74 75	R/W	0.1 to 1000.0 °C (0.1 to 1800.0°F) For DC current input and DC voltage input: 1 to 10000
Alarm 2 hysteresis setting	4	CH1 CH2 CH3 CH4	004C 004D 004E 004F	76 77 78 79	R/W	
Alarm 3 hysteresis setting	4	CH1 CH2 CH3 CH4	0050 0051 0052 0053	80 81 82 83	R/W	
Alarm 4 hysteresis setting	4	CH1 CH2 CH3 CH4	0054 0055 0056 0057	84 85 86 87	R/W	

Data Item	Amount of data:	Channel	Address		Attribute	Data
			HEX	DEC		
Alarm 1 setting	4	CH1 CH2 CH3 CH4	0058 0059 005A 005B	88 89 90 91	R/W	Refer to “Alarm 1 to 4 value setting range table (11-5)”.
Alarm 1 high limit setting	4	CH1 CH2 CH3 CH4	005C 005D 005E 005F	92 93 94 95	R/W	
Alarm 2 setting	4	CH1 CH2 CH3 CH4	0060 0061 0062 0063	96 97 98 99	R/W	
Alarm 2 high limit setting	4	CH1 CH2 CH3 CH4	0064 0065 0066 0067	100 101 102 103	R/W	
Alarm 3 setting	4	CH1 CH2 CH3 CH4	0068 0069 006A 006B	104 105 106 107	R/W	
Alarm 3 high limit setting	4	CH1 CH2 CH3 CH4	006C 006D 006E 006F	108 109 110 111	R/W	
Alarm 4 setting	4	CH1 CH2 CH3 CH4	0070 0071 0072 0073	112 113 114 115	R/W	
Alarm 4 high limit setting	4	CH1 CH2 CH3 CH4	0074 0075 0076 0077	116 117 118 119	R/W	
Heater burnout alarm setting	4	CH1 CH2 CH3 CH4	0078 0079 007A 007B	120 121 122 123	R/W	For 20 A is selected: 0.0 to 20.0 A For 100 A is selected: 0.0 to 100.0 A
Loop break alarm band setting	4	CH1 CH2 CH3 CH4	007C 007D 007E 007F	124 125 126 127	R/W	0 to 150 °C (0 to 270 °F) or 0.0 to 150.0 °C (0.0 to 270.0 °F) For DC current input and DC voltage input: 0 to1500
Loop break alarm time setting	4	CH1 CH2 CH3 CH4	0080 0081 0082 0083	128 129 130 131	R/W	0 to 200 minutes
Sensor correction coefficient setting	4	CH1 CH2 CH3 CH4	0084 0085 0086 0087	132 133 134 135	R/W	0.000 to 10.000

Data Item	Amount of data:	Channel	Address		Attribute	Data
			HEX	DEC		
Sensor correction setting	4	CH1 CH2 CH3 CH4	0088 0089 008A 008B	136 137 138 139	R/W	-100.0 to 100.0 °C (-180.0 to 180.0 °F) For DC current input and DC voltage input: -1000 to 1000
PV filter setting	4	CH1 CH2 CH3 CH4	008C 008D 008E 008F	140 141 142 143	R/W	0.0 to 10.0 seconds
SV rise rate setting	4	CH1 CH2 CH3 CH4	0090 0091 0092 0093	144 145 146 147	R/W	0 to 10000 °C/min (0 to 18000 °F/min) or 0.0 to 1000.0 °C/min (0.0 to 1800.0 °F/min) For DC current input and DC voltage input: 0 to 10000/min
SV fall rate setting	4	CH1 CH2 CH3 CH4	0094 0095 0096 0097	148 149 150 151	R/W	0 to 10000 °C/min (0 to 18000 °F/min) or 0.0 to 1000.0 °C/min (0.0 to 1800.0 °F/min) For DC current input and DC voltage input: 0 to 10000/min
MV bias setting	4	CH1 CH2 CH3 CH4	0098 0099 009A 009B	152 153 154 155	R/W	0.0 to 100.0 %

Alarm 1 to 4 setting range table

Alarm action	Setting range
No event	
High limit alarm	-(Input span) to Input span (*1)
Low limit alarm	-(Input span) to Input span (*1)
High/Low limits alarm	0 to Input span (*1)
High/Low limits range alarm	0 to Input span (*1)
Process high alarm	Input range low limit to Input range high limit (*2)
Process low alarm	Input range low limit to Input range high limit (*2)
High limit with standby	-(Input span) to Input span (*1)
Low limit with standby	-(Input span) to Input span (*1)
High/Low limits alarm with standby	0 to Input span (*1)
High/Low limits alarm individually	0 to Input span (*1)
High/Low limits range alarm individually	0 to Input span (*1)
High/Low limits alarm with standby individually	0 to Input span (*1)

(*1): For DC voltage, current input, the input span is the same as the scaling span.

(*2) For DC voltage, current input, input range low (or high) limit value is the same as scaling low (or high) limit value.

Data Item	Amount of data:	Channel	Address		Attribute	Data
			HEX	DEC		
Reservation (*)			009C to 00C7			
Input type selection	4	CH1 CH2 CH3 CH4	00C8 00C9 00CA 00CB	200 201 202 203	R/W	For input code M is specified: 0000H: K -200 to 1370 °C 0001H: K -200.0 to 400.0 °C 0002H: J -200 to 1000 °C 0003H: R 0 to 1760 °C 0004H: S 0 to 1760 °C 0005H: B 0 to 1820 °C 0006H: E -200 to 800 °C 0007H: T -200.0 to 400.0 °C 0008H: N -200 to 1300 °C 0009H: PL-Ⅱ 0 to 1390 °C 000AH: C(W/Re5-26) 0 to 2315 °C 000BH: Pt100 -200.0 to 850.0 °C 000CH: 0 to 1 V DC -2000 to 10000 000DH: 4 to 20 mA DC -2000 to 10000 000EH: 0 to 20 mA DC -2000 to 10000
						For input code A is specified: 0000H: 4 to 20 mA DC (Built-in receiving resistor) -2000 to 10000 0001H: 0 to 20 mA DC (Built-in receiving resistor) -2000 to 10000
						For input code V is specified: 0000H: 0 to 5 V DC -2000 to 10000 0001H: 1 to 5 V DC -2000 to 10000 0002H: 0 to 10 V DC -2000 to 10000
Temperature unit selection	4	CH1 CH2 CH3 CH4	00CC 00CD 00CE 00CF	204 205 206 207	R/W	0000H: °C (Celsius) 0001H: °F (Fahrenheit) For input code M is specified, it can be selected.
Scaling high limit setting	4	CH1 CH2 CH3 CH4	00D0 00D1 00D2 00D3	208 209 210 211	R/W	Scaling low limit value to Rated high limit value

(*): A single or multiple data are read, the reserved item returns the initial value (0) in acknowledgment.
When writing single or multiple, Acknowledgement is returned and the data is discarded.

Data Item	Amount of data:	Channel	Address		Attribute	Data
			HEX	DEC		
Scaling low limit setting	4	CH1 CH2 CH3 CH4	00D4 00D5 00D6 00D7	212 213 214 215	R/W	Rated low limit value to Scaling high limit value
Input sampling selection	4	CH1 CH2 CH3 CH4	00D8 00D9 00DA 00DB	216 217 218 219	R/W	0000H: 125 ms 0001H: 50 ms 0002H: 20 ms Fixed to 125 ms for thermocouple input and RTD input. It becomes invalid if a value other than 125 ms is selected.
Direct/Reverse action selection	4	CH1 CH2 CH3 CH4	00DC 00DD 00DE 00DF	220 221 222 223	R/W	0000H: Reverse action 0001H: Direct action
AT action mode selection	4	CH1 CH2 CH3 CH4	00E0 00E1 00E2 00E3	224 225 226 227	R/W	0000H: Normal AT 0001H: Start-up AT
AT bias setting	4	CH1 CH2 CH3 CH4	00E4 00E5 00E6 00E7	228 229 230 231	R/W	0 to 50 °C (0 to 90 °F) or 0.0 to 50.0 °C (0.0 to 90.0 °F)
AT gain setting	4	CH1 CH2 CH3 CH4	00E8 00E9 00EA 00EB	232 233 234 235	R/W	0.1 to 10.0 times
Alarm 1 value 0 Enabled/ Disabled selection	4	CH1 CH2 CH3 CH4	00EC 00ED 00EE 00EF	236 237 238 239	R/W	0000H: Enabled 0001H: Disabled
Alarm 2 value 0 Enabled/ Disabled selection	4	CH1 CH2 CH3 CH4	00F0 00F1 00F2 00F3	240 241 242 243	R/W	
Alarm 3 value 0 Enabled/ Disabled selection	4	CH1 CH2 CH3 CH4	00F4 00F5 00F6 00F7	244 245 246 247	R/W	
Alarm 4 value 0 Enabled/ Disabled selection	4	CH1 CH2 CH3 CH4	00F8 00F9 00FA 00FB	248 249 250 251	R/W	

Data Item	Amount of data:	Channel	Address		Attribute	Data
			HEX	DEC		
Event output allocation selection	4	CH1 CH2 CH3 CH4	00FC 00FD 00FE 00FF	252 253 254 255	R/W	0000H: No event It can be output arbitrarily from the host by setting a value in the event output status flag. 0 is set to the event output status flag when the event output is turned OFF, and 1 is set to it when the event output is turned ON. 0001H: Event output (CH alone) The event output turns ON when any of the alarm, heater burnout alarm or loop break alarm of the selected channel is activated. 0002H: Event output (CH interlocking) The event output turns ON when any of the alarm, heater burnout alarm or loop break alarm is activated in all channels.
Event input allocation selection	4	CH1 CH2 CH3 CH4	0100 0101 0102 0103	256 257 258 259	R/W	0000H: No event It can be used for any operation by reading the event input status flag. 0 is set to the event input status flag when the event input is turned OFF, and 1 is set to it when the event input is turned ON. 0001H: Control start/stop (CH alone) For only selected channels, control is started when the event input is turned ON, and control is stop when the event input is turned OFF. 0002H: Control start/stop (CH interlocking) For all channels, control is started when the event input is turned ON, and control is stop when the event input is turned OFF.

Data Item	Amount of data:	Channel	Address		Attribute	Data
			HEX	DEC		
CH Enabled/ Disabled selection	4	CH1 CH2 CH3 CH4	0104 0105 0106 0107	260 261 262 263	R/W	0000H: Disable 0001H: Enable
Number of moving average setting	4	CH1 CH2 CH3 CH4	0108 0109 010A 010B	264 265 266 267	R/W	1 to 10 times
Reservation (*1)			010C to 012B			
Input math function selection	4	CH1 CH2 CH3 CH4	012C 012D 012E 012F	300 301 302 303	R/W	0000H: Standard 0001H: Difference input (*2) [(CH1-CH2) or (CH3-CH4)] 0002H: Addition input (*2) [(CH1+CH2) or (CH3+CH4)]
Input difference selection	4	CH1 CH2 CH3 CH4	0130 0131 0132 0133	304 305 306 307	R/W	0000H: Disable 0001H: CH1 0002H: CH2 0003H: CH3 0004H: CH4
Input difference setting	4	CH1 CH2 CH3 CH4	0134 0135 0136 0137	308 309 310 311	R/W	1 to 1000 °C (1 to 1800 °F) or 0.1 to 1000.0 °C (0.1 to 1800.0 °F) For DC current input and DC voltage input: 1 to 10000
Control action selection(*3)	4	CH1 CH2 CH3 CH4	0138 0139 013A 013B	312 313 314 315	R/W	0000H: 2 DOF PID control 0001H: Fast-PID control 0002H: Slow-PID control 0003H: ON-OFF control 0004H: Gap-PID control Selectable only when control is prohibited.

(*1): A single or multiple data are read, the reserved item returns the initial value (0) in acknowledgment.
When writing single or multiple, acknowledgement is returned and the data is discarded.

(*2): Select CH1 or CH3 for differential input and addition input.
It is disabled when CH2 or CH4 is selected.

(*3): When integral time is 0 or 0.0, if Slow-PID control is selected or control action is selected when control is enabled (during control execution), error code 17 (11H) is returned with negative acknowledgement.

Data Item	Amount of data:	Channel	Address		Attribute	Data
			HEX	DEC		
Proportional gain 2 DOF coefficient (α) setting	4	CH1 CH2 CH3 CH4	013C 013D 013E 013F	316 317 318 319	R/W	0.00 to 1.00 **When select "1: Fast-PID control", "2: Slow-PID control", "3: ON-OFF control", or "4: Gap-PID control" in control action, do not change this setting item.**
Integral 2 DOF coefficient (β) setting	4	CH1 CH2 CH3 CH4	0140 0141 0142 0143	320 321 322 323	R/W	0.00 to 10.00 **When select "1: Fast-PID control", "2: Slow-PID control", "3: ON-OFF control", or "4: Gap-PID control" in control action, do not change this setting item.**
Derivative 2 DOF coefficient (γ, Cd) setting	4	CH1 CH2 CH3 CH4	0144 0145 0146 0147	324 325 326 327	R/W	0.00 to 1.00 **Do not change this setting item.**
SV proportional coefficient (Cp) setting	4	CH1 CH2 CH3 CH4	0148 0149 014A 014B	328 329 330 331	R/W	0.00 to 1.00 **Do not change this setting item.**
Gap width setting	4	CH1 CH2 CH3 CH4	014C 014D 014E 014F	332 333 334 335	R/W	0.0 to 10.0 % Proportional band × Gap width
Gap coefficient setting	4	CH1 CH2 CH3 CH4	0150 0151 0152 0153	336 337 338 339	R/W	0.0 to 1.0
Output minimum ON/OFF time setting	4	CH1 CH2 CH3 CH4	0154 0155 0156 0157	340 341 342 343	R/W	0 to 1000 ms
Integral/ Derivative decimal point position selection	4	CH1 CH2 CH3 CH4	0158 0159 015A 015B	344 345 346 347	R/W	0000H: Without decimal point 0001H: With decimal point
Restore action selection when power is turn on	4	CH1 CH2 CH3 CH4	015C 015D 015E 015F	348 349 350 351	R/W	0000H: Stopped state. 0001H: Continuous state (State before power OFF)
Reservation (*)			0160 to 018F			

(*): A single or multiple data are read, the reserved item returns the initial value (0) in acknowledgment.
When writing single or multiple, Acknowledgement is returned and the data is discarded.

Data Item	Amount of data:	Channel	Address		Attribute	Data
			HEX	DEC		
Control function selection	4	CH1 CH2 CH3 CH4	0190 0191 0192 0193	400 401 402 403	R/W	0000H: Standard 0001H: Heating/cooling control (*) 0002H: Cascade control (*) 0003H: Output selection function Selectable only when control is prohibited.
Cooling proportional band setting	4	CH1 CH2 CH3 CH4	0194 0195 0196 0197	404 405 406 407	R/W	0 to Iinput span °C (°F) or 0.0 to Iinput span °C (°F) For DC current input and DC voltage input: 0.00 to 100.00 % Set with CH1 or CH3. It is disabled when set with CH2 or CH4.
Cooling integral time setting	4	CH1 CH2 CH3 CH4	0198 0199 019A 019B	408 409 410 411	R/W	0 to 3600 seconds or 0.0 to 2000.0 seconds When “2: Slow-PID control” is selected in control action: 1 to 3600 seconds or 0.1 to 2000.0 seconds Set with CH1 or CH3. It is disabled when set with CH2 or CH4.
Cooling derivative time setting	4	CH1 CH2 CH3 CH4	019C 019D 019E 019F	412 413 414 415	R/W	0 to 3600 seconds or 0.0 to 2000.0 seconds Set with CH1 or CH3. It is disabled when set with CH2 or CH4.
Cooling proportional cycle setting	4	CH1 CH2 CH3 CH4	01A0 01A1 01A2 01A3	416 417 418 419	R/W	0.1 to 100.0 seconds Set with CH1 or CH3. It is disabled when set with CH2 or CH4.
Cooling ON/OFF hysteresis setting	4	CH1 CH2 CH3 CH4	01A4 01A5 01A6 01A7	420 421 422 423	R/W	0.1 to 1000.0 °C (0.1 to 1800.0 °F) For DC current input and DC voltage input: 1 to 10000 Set with CH1 or CH3. It is disabled when set with CH2 or CH4.

(*): Select CH1 or CH3 for heating/cooling control and cascade control.
It is disabled when CH2 or CH4 is selected.

Data Item	Amount of data:	Channel	Address		Attribute	Data
			HEX	DEC		
Overlap/Dead band setting	4	CH1 CH2 CH3 CH4	01A8 01A9 01AA 01AB	424 425 426 427	R/W	-100.0 to 100.0 °C (-180.0 to 180.0 °F) For DC current input and DC voltage input: -1000 to 1000 Set with CH1 or CH3. It is disabled when set with CH2 or CH4.
Cooling output high limit setting	4	CH1 CH2 CH3 CH4	01AC 01AD 01AE 01AF	428 429 430 431	R/W	Cooling output low limit to 100.0 % For current output: Cooling output low limit to 105.0 % Set with CH1 or CH3. It is disabled when set with CH2 or CH4.
Cooling output low limit setting	4	CH1 CH2 CH3 CH4	01B0 01B1 01B2 01B3	432 433 434 435	R/W	0.0 % to Cooling output high limit For current output: -5.0 % to Cooling output high limit Set with CH1 or CH3. It is disabled when set with CH2 or CH4.
Cooling action mode selection	4	CH1 CH2 CH3 CH4	01B4 01B5 01B6 01B7	436 437 438 439	R/W	0000H: Air cooling (Linear characteristics) 0001H: Oil cooling (1.5th power of the linear characteristics) 0002H: Water cooling (2nd power of the linear characteristics) Set with CH1 or CH3. It is disabled when set with CH2 or CH4.
Slave scale high limit setting	4	CH1 CH2 CH3 CH4	01B8 01B9 01BA 01BB	440 441 442 443	R/W	Slave scale low limit to Slave input range high limit Set with CH1 or CH3. It is disabled when set with CH2 or CH4.
Slave scale low limit setting	4	CH1 CH2 CH3 CH4	01BC 01BD 01BE 01BF	444 445 446 447	R/W	Slave input range low limit to Slave scale high limit Set with CH1 or CH3. It is disabled when set with CH2 or CH4.
Output bias setting	4	CH1 CH2 CH3 CH4	01C0 01C1 01C2 01C3	448 449 450 451	R/W	0.0 to 100.0 %

Data Item	Amount of data:	Channel	Address		Attribute	Data
			HEX	DEC		
Output gain setting	4	CH1 CH2 CH3 CH4	01C4 01C5 01C6 01C7	452 453 454 455	R/W	0.00 to 10.00 times
Output channel selection	4	CH1 CH2 CH3 CH4	01C8 01C9 01CA 01CB	456 457 458 459	R/W	0000H: CH1 0001H: CH2 0002H: CH3 0003H: CH4 This is valid when “Output selection function” is selected in “Control function selection (11-11)”.
Output rate-of change setting	4	CH1 CH2 CH3 CH4	01CC 01CD 01CE 01CF	460 461 462 463	R/W	0.00 to 100.00 %/sec
Reservation (*1)			01D0 to 01F3			
Communication response delay time setting	1		01F4	500	R/W	0 to 1000 ms
Extension function selection	1		01F5	501	R/W	0000H: Without expanded function 0001H: Reservation (*2) **(Do not set up.)** 0002H: Auto balance control function
Reservation (*1)			01F6 to 01FB			
Auto balance control Interlock/Alone selection	1		01FC	508	R/W	0000H: Single 0001H: Interlock
Auto balance control Master/Slave selection	1		01FD	509	R/W	0000H: Slave channel 0001H: CH1 master channel 0002H: CH2 master channel 0003H: CH3 master channel 0004H: CH4 master channel
Auto balance control Enabled/ Disabled selection	4	CH1 CH2 CH3 CH4	01FE 01FF 0200 0201	510 511 512 513	R/W	0000H: Disable 0001H: Enable

(*1): It is reservation data of expanded function. Do not set up.

(*2): A single or multiple data are read, the reserved item returns the initial value (0) in acknowledgment.
When writing single or multiple, Acknowledgement is returned and the data is discarded.

Data Item	Amount of data:	Channel	Address		Attribute	Data
			HEX	DEC		
Auto balance control start output setting	4	CH1 CH2 CH3 CH4	0202 0203 0204 0205	514 515 516 517	R/W	0.00 to 1.00 (corresponds to 0 to 100 %)
Auto balance control release range setting(*1)	4	CH1 CH2 CH3 CH4	0206 0207 0208 0209	518 519 520 521	R/W	0 to Input span °C (°F) × 10 % or 0.0 to Input span °C (°F) × 10 % For DC current input and DC voltage input: 0 to Scaling span × 10 %
Number of communication management module setting	1		020A	522	R/W	1 to 16 modules
Non-volatile IC memory save selection	1		020B	523	R/W	0000H: Save permission 0001H: Save prohibited
Host setting value change flag clearing selection	1		020C	524	R/W	0000H: Clear 0001H: Do not clear (Change setting value)
USB setting value change flag clearing selection	1		020D	525	R/W	0000H: Clear 0001H: Do not clear (Change setting value)
PV reading (including difference)	4	CH1 CH2 CH3 CH4	03E8 03E9 03EA 03EB	1000 1001 1002 1003	RO	Value of "14.2.1 Control Range (14-6)" Corresponding to Input calculation function (Difference input, Addition input) and Input difference detection. (*2)
MV reading	4	CH1 CH2 CH3 CH4	03EC 03ED 03EE 03EF	1004 1005 1006 1007	RO	Output low limit to Output high limit
SV reading	4	CH1 CH2 CH3 CH4	03F0 03F1 03F2 03F3	1008 1009 1010 1011	RO	Scaling low limit to Scaling high limit

(*1): When 0 is set, the auto balance control release area is twice the proportional band of the master channel.

(*2): When power is supplied from the host computer by USB bus power, 0 is returned.

Data Item	Amount of data:	Channel	Address		Attribute	Data
			HEX	DEC		
Status flag 1 reading	4	CH1 CH2 CH3 CH4	03F4 03F5 03F6 03F7	1012 1013 1014 1015	RO	B0: Control Enable/Diseble 0: Diseble 1: Enable B1: AT Perform/Cancel 0: Cancel 1: Perform B2: Auto/Manual control 0: Automatic 1: Manual B3: Control output 0: OFF 1: ON B4: Input error (Overscale) 0: Normal 1: Error B5: Input Error (Underscale) 0: Normal 1: Error B6: Alarm 1 output 0: OFF 1: ON B7: Alarm 2 output 0: OFF 1: ON B8: Alarm 3 output 0: OFF 1: ON B9: Alarm 4 output 0: OFF 1: ON B10: Loop break alarm output 0: OFF 1: ON B11: Heater burnout alarm output 0: OFF 1: ON B12: Input difference 0: Within range 1: Without range B13: Not used B14: Power supply identification (*) 0: 24 V DC 1: USB bus power B15: Non-volatile IC memory error 0: Normal 1: Error

(*): When power is supplied from 24 V DC and USB bus power, 0: 24 V DC is returned.

Data Item	Amount of data:	Channel	Address		Attribute	Data
			HEX	DEC		
Status flag 2 reading	4	CH1 CH2 CH3 CH4	03F8 03F9 03FA 03FB	1016 1017 1018 1019	RO	B0: Auto balance control 0: None 1: During auto balance control B1: Not used B2: Not used B3: Not used B4: Cold junction error 0: Normal 1: Error B5: Sensor error 0: Normal 1: Error B6: ADC error 0: Normal 1: Error B7: Host setting value change flag 0: Without flag 1: With flag B8: USB setting value change flag 0: Without flag 1: With flag B9: Not used B10: Not used B11: Not used B12 to B15: System bit for internal processing. Do not use.
Heater current value reading	4	CH1 CH2 CH3 CH4	03FC 03FD 03FE 03FF	1020 1021 1022 1023	RO	0.0 to 20.0 A or 0.0 to 100.0 A
Event input reading	4	CH1 CH2 CH3 CH4	0400 0401 0402 0403	1024 1025 1026 1027	RO	0000H: OFF 0001H: ON
Event output reading	4	CH1 CH2 CH3 CH4	0404 0405 0406 0407	1028 1029 1030 1031	RO	0000H: OFF 0001H: ON
PV reading (true value)	4	CH1 CH2 CH3 CH4	0408 0409 040A 040B	1032 1033 1034 1035	RO	Value of "14.2.1 Control Range (14-6)" The input value of each channel is read regardless of the calculation function (Difference input, Addition input) and input difference detection. (*)

(*): When power is supplied from the host computer by USB bus power, 0 is returned.

Data Item	Amount of data:	Channel	Address HEX	Address DEC	Attribute	Data
Ambient temperature reading	4	CH1 CH2 CH3 CH4	040C 040D 040E 040F	1036 1037 1038 1039	RO	Read the input terminal temperature of each channel. (*)
Alarm history 1 Error No.	4	CH1 CH2 CH3 CH4	044C 044D 044E 044F	1100 1101 1102 1103	RO	B0: Alarm 1 0: Normal 1: Error B1: Alarm 2 0: Normal 1: Error B2: Alarm 3 0: Normal 1: Error B3: Alarm 4 0: Normal 1: Error B4: Heater burnout alarm 0: Normal 1: Error B5: Not used B6: Loop break alarm 0: Normal 1: Error B7: Sensor error 0: Normal 1: Error B8: Input error (Overscale) 0: Normal 1: Error B9: Input error (Underscale) 0: Normal 1: Error B10: Cold junction error 0: Normal 1: Error B11: Non-volatile IC memory error 0: Normal 1: Error B12: ADC error 0: Normal 1: Error B13: Not used B14: Not used B15: Not used
Alarm history 2 Error No.	4	CH1 CH2 CH3 CH4	0450 0451 0452 0453	1104 1105 1106 1107	RO	
Alarm history 3 Error No.	4	CH1 CH2 CH3 CH4	0454 0455 0456 0457	1108 1109 1110 1111	RO	
Alarm history 4 Error No.	4	CH1 CH2 CH3 CH4	0458 0459 045A 045B	1112 1113 1114 1115	RO	
Alarm history 5 Error No.	4	CH1 CH2 CH3 CH4	045C 045D 045E 045F	1116 1117 1118 1119	RO	
Alarm history 6 Error No.	4	CH1 CH2 CH3 CH4	0460 0461 0462 0463	1120 1121 1122 1123	RO	
Alarm history 7 Error No.	4	CH1 CH2 CH3 CH4	0464 0465 0466 0467	1124 1125 1126 1127	RO	
Alarm history 8 Error No.	4	CH1 CH2 CH3 CH4	0468 0469 046A 046B	1128 1129 1130 1131	RO	
Alarm history 9 Error No.	4	CH1 CH2 CH3 CH4	046C 046D 046E 046F	1132 1133 1134 1135	RO	
Alarm history 10 Error No.	4	CH1 CH2 CH3 CH4	0470 0471 0472 0473	1136 1137 1138 1139	RO	

(*): When thermocouple input, convert it to a value according to temperature unit selection.
For the read value, the value of the first decimal place is returned regardless of the presence or absence of a decimal point in the input range.
(Example) If 0.0 °C (32.0 °F), the read value will be 0 (320).
When RTD input, DC current input, and DC voltage input, 0 is returned.

Data Item	Amount of data:	Channel	Address		Attribute	Data
			HEX	DEC		
Alarm history 1 Total energizing time	4	CH1 CH2 CH3 CH4	0474 0475 0476 0477	1140 1141 1142 1143	RO	Total energizing time when an error occurs
Alarm history 2 Total energizing time	4	CH1 CH2 CH3 CH4	0478 0479 047A 047B	1144 1145 1146 1147	RO	
Alarm history 3 Total energizing time	4	CH1 CH2 CH3 CH4	047C 047D 047E 047F	1148 1149 1150 1151	RO	
Alarm history 4 Total energizing time	4	CH1 CH2 CH3 CH4	0480 0481 0482 0483	1152 1153 1154 1155	RO	
Alarm history 5 Total energizing time	4	CH1 CH2 CH3 CH4	0484 0485 0486 0487	1156 1157 1158 1159	RO	
Alarm history 6 Total energizing time	4	CH1 CH2 CH3 CH4	0488 0489 048A 048B	1160 1161 1162 1163	RO	
Alarm history 7 Total energizing time	4	CH1 CH2 CH3 CH4	048C 048D 048E 048F	1164 1165 1166 1167	RO	
Alarm history 8 Total energizing time	4	CH1 CH2 CH3 CH4	0490 0491 0492 0493	1168 1169 1170 1171	RO	
Alarm history 9 Total energizing time	4	CH1 CH2 CH3 CH4	0494 0495 0496 0497	1172 1173 1174 1175	RO	
Alarm history 10 Total energizing time	4	CH1 CH2 CH3 CH4	0498 0499 049A 049B	1176 1177 1178 1179	RO	
Contact switching total number of times (High)	4	CH1 CH2 CH3 CH4	049C 049D 049E 049F	1180 1181 1182 1183	RO	Contact switching total number of times (High)
Contact switching total number of times (Low)	4	CH1 CH2 CH3 CH4	04A0 04A1 04A2 04A3	1184 1185 1186 1187	RO	Contact switching total number of times (Low)

Data Item	Amount of data:	Channel	Address		Attribute	Data
			HEX	DEC		
Total energizing time (High, Low)	4	(High) (Low)	04A4 04A5 04A6 04A7	1188 1189 1190 1191	RO	Total energizing time 1 count/10 min 1190, 1191 is always 0.
Heater accumulated energizing time (High)	4	CH1 CH2 CH3 CH4	04A8 04A9 04AA 04AB	1192 1193 1194 1195	RO	Heater accumulated energizing time (High) 1 count/1 min
Heater accumulated energizing time (Low)	4	CH1 CH2 CH3 CH4	04AC 04AD 04AE 04AF	1196 1197 1198 1199	RO	Heater accumulated energizing time (Low) 1 count/1 min
Output form	4	CH1 CH2 CH3 CH4	04B0 04B1 04B2 04B3	1200 1201 1202 1203	RO	0000H: Relay contact output 0001H: Non-contact voltage (for SSR drive) output 0002H: Open collector output 0003H: Triac output 0004H: DC current output 4 to 20 mA DC 0005H: DC current output 0 to 20 mA DC 0006H: DC voltage output 0 to 1 V DC 0007H: DC voltage output 0 to 5 V DC 0008H: DC voltage output 1 to 5 V DC 0009H: DC voltage output 0 to 10 V DC
Input form	4	CH1 CH2 CH3 CH4	04B4 04B5 04B6 04B7	1204 1205 1206 1207	RO	0000H: Input code M 0001H: Input code A 0002H: Input code V
Product code	1		04B8	1208	RO	Product code
Presence of communication option	1		04B9	1209	RO	0000H: No option 0001H: With power supply/upper communication function
Wiring type	1		04BA	1210	RO	0000H: Terminal type 0001H: Connector type
Presence of heater burnout alarm option	1		04BB	1211	RO	0000H: No option 0001H: Single-phase 20 A 0002H: Single-phase 100 A 0003H: 3-phase 20 A 0004H: 3-phase 100 A
Presence of event option	1		04BC	1212	RO	0000H: No option 0001H: Event input (4 points) 0002H: Event output (4 points)

Data Item	Amount of data:	Channel	Address		Attribute	Data
			HEX	DEC		
Software version	1		04BD	1213	RO	Software version
Manufacturing date	1		04BE	1214	RO	Manufacturing date
Hardware version	1		04BF	1215	RO	Hardware version
Reservation (*)			04C0 to 0513			
Maintenance mode selection	1		0514	1300	R/W	0000H: Normal mode 0001H: Maintenance mode
Control output compulsion ON/OFF selection	4	CH1 CH2 CH3 CH4	0515 0516 0517 0518	1301 1302 1303 1304	R/W	0000H: Control output OFF 0001H: Control output ON
Event output compulsion ON/OFF selection	4	CH1 CH2 CH3 CH4	0519 051A 051B 051C	1305 1306 1307 1308	R/W	0000H: Event output OFF 0001H: Event output ON
Integration time of contact switching setting (High)	4	CH1 CH2 CH3 CH4	051D 051E 051F 0520	1309 1310 1311 1312	R/W	Integration time of contact switching (High)
Integration time of contact switching setting (Low)	4	CH1 CH2 CH3 CH4	0521 0522 0523 0524	1313 1314 1315 1316	R/W	Integration time of contact switching (Low)
Cumulative electrification time of heater setting (High)	4	CH1 CH2 CH3 CH4	0525 0526 0527 0528	1317 1318 1319 1320	R/W	Cumulative electrification time of heater (High) 1 count/1 min
Cumulative electrification time of heater setting (Low)	4	CH1 CH2 CH3 CH4	0529 052A 052B 052C	1321 1322 1323 1324	R/W	Cumulative electrification time of heater (Low) 1 count/1 min

(*): A single or multiple data are read, the reserved item returns the initial value (0) in acknowledgment.
When writing single or multiple, Acknowledgement is returned and the data is discarded.

11.2 Data

11.2.1 Notes About Write/Read Command

- The data (set value, decimal) is converted to a hexadecimal number.
  Negative numbers are represented in 2's complement.
- Do not use undefined Data items. If they are used, negative acknowledgement will be returned or a random value will be written or read, resulting in malfunction.
- MODBUS protocol uses Holding Register addresses. The Holding Register addresses are created as follows.
  A data item is converted to decimal number, and the offset of 40001 is added. The result is the Holding Register address.
  Using CH1 SV (0018H) as an example: Data item in the sending message is 0018H, however, MODBUS protocol Holding Register address is 40025 (24+40001).

11.2.2 Write Command

- The lifetime of the non-volatile IC memory is about 10 trillion writes.
  Do not change the set value frequently by communication, as the set value storage retention time may be shortened if the number of times is exceeded. (If the set value is the same as the value before setting, it is not written to the non-volatile IC memory.)
- When data (set value) has a decimal point, a whole number (hexadecimal) without a decimal point is used.
- If the operation is changed with Alarm 1 action to Alarm 4 action (0038H to 0047H), Alarm 1 value to Alarm 4 value (0058H to 0077H) will return to the factory default values.
  For the items to be initialized, refer to “11.5 Initialization Items by Changing Settings (11-23)”.
- Even if options are not ordered, writing via software communication will be possible. However, their command contents will not function.
- Communication parameters such as module address and communication speed of this instrument cannot be written by software communication. Set it with the rotary switch for module address selection and the dip switch for selecting communication specifications.
- When Write is executed using the Broadcast address [(00H) MODBUS protocol] command, the command is sent to all the connected slaves. However, a response is not returned.

11.2.3 Read Command

- When the data (set value) has a decimal point, a whole number (hexadecimal) without a decimal point is used for a response.

11.3 Negative Acknowledgement

11.3.1 Error Code 2 (02H)

The slave will return Error code 2 (02H) in the following case.

- When non-existent data item is read or written.

11.3.2 Error Code 3 (03H)

The slave will return Error code 3 (03H) in the following case.

- When a value out of the setting range is written.

11.3.3 Error Code 17 (11H)

The slave will return Error code 17 (11H) in the following case.

- When AT execution (0001H) is written with AT execution/stop selection (0008H to 000BH) during PI operation or ON/OFF operation.
- When AT execution (0001H) is written with AT execution/stop selection (0008H to 000BH) during AT execution.
  When the control enable/disable selection (0004H to 0007H) is written during AT execution.
- When manual control MV setting (0014H to 0017H) is written during automatic control.

11.4 Notes on Programming Monitoring Software

11.4.1 How to Speed up the Scan Time

When monitoring multiple this instrument, set the program so that the requisite minimum pieces of data such as PV (03E8H to 03EBH), MV (03ECH to 03EFH), Status flag 1 (03F4H to 03F7H) can be read.

For other data, set the program so that they can be read only when their set value has changed.

This will speed up the scan time.

11.4.2 How to Read PID Parameters after AT or Start-up AT Finishes

While AT or Start-up AT is performing, this instrument sets “B1: AT Perform/Cancel” of “Status flag 1 (03F4H to 03F7H)” to “1: AT Perform”.

After AT or Start-up AT is finished, PID parameters are updated.

On the monitoring software side, check that “B1: AT Perform/Cancel” of “Status flag 1 (03F4H to 03F7H)” has been set to “0: AT Cancel”, then read parameters such as P, I, D.

11.4.3 Notes on Batch Transmission of All Setting Values

- If the operation is changed with Alarm 1 action to Alarm 4 action (0038H to 0047H), Alarm 1 value to Alarm 4 value (0058H to 0077H) will return to the factory default values.
  Send the Alarm action and then the Alarm value.
  For the items to be initialized, refer to “11.5 Items to be Initialized by Changing Settings (11-23)”.
- If the input type is changed with Input type (00C8H to 00CBH), the setting values such as SV, Proportional band, and Alarm 1 value are initialized.
  Send the Input type and then the other setting values.
  For the items to be initialized, refer to “11.5 Initialization Items by Changing Settings (11-23)”.

11.5 Initialization Items by Changing Settings

The items that are initialized by changing the settings are shown below.

○: Initialize

—: Not initialize

Initialized item \ Setting change item	Input type (00C8H to 00CBH)	Temperature unit (00CCH to 00CFH)	Alarm 1 action (0038H to 003BH)	Alarm 2 action (003CH to 003FH)	Alarm 3 action (0040H to 0043H)	Alarm 4 action (0044H to 0047H)
SV (0018H to 001BH)	○	○	—	—	—	—
Proportional band (001CH to 001FH)	○	○	—	—	—	—
ON/OFF hysteresis (002CH to 002FH)	○	○	—	—	—	—
Alarm 1 hysteresis (0048H to 004BH)	○	○	○	—	—	—
Alarm 2 hysteresis (004CH to 004FH)	○	○	—	○	—	—
Alarm 3 hysteresis (0050H to 0053H)	○	○	—	—	○	—
Alarm 4 hysteresis (0054H to 0057H)	○	○	—	—	—	○
Alarm 1 value (0058H to 005BH)	○	○	○	—	—	—
Alarm 1 high limit value (005CH to 005FH)	○	○	○	—	—	—
Alarm 2 value (0060H to 0063H)	○	○	—	○	—	—
Alarm 2 high limit value (0064H to 0067H)	○	○	—	○	—	—
Alarm 3 value (0068H to 006BH)	○	○	—	—	○	—
Alarm 3 high limit value (006CH to 006FH)	○	○	—	—	○	—
Alarm 4 value (0070H to 0073H)	○	○	—	—	—	○
Alarm 4 high limit value (0074H to 0077H)	○	○	—	—	—	○
Loop break alarm band (007CH to 007FH)	○	○	—	—	—	—
Loop break alarm time (0080H to 0083H)	○	○	—	—	—	—
Sensor correction coefficient (0084H to 0087H)	○	○	—	—	—	—
Sensor correction (0088H to 008BH)	○	○	—	—	—	—
SV rise rate (0090H to 0093H)	○	○	—	—	—	—
SV fall rate (0094H to 0097H)	○	○	—	—	—	—
Scaling high limit (00D0H to 00D3H)	○	○	—	—	—	—
Scaling low limit (00D4H to 00D7H)	○	○	—	—	—	—
AT bias (00E4H to 00E7H)	○	○	—	—	—	—
Input difference (0134H to 0137H)	○	○	—	—	—	—
Cooling proportional band (0194H to 0197H)	○	○	—	—	—	—
Slave scale high limit (01B8H to 01BBH)	○	○	—	—	—	—
Slave scale low limit (01BCH to 01BFH)	○	○	—	—	—	—
Auto balance control release range (0206H to 0209H)	○	○	—	—	—	—

12 Operation

This section describes the operation when operating by communicating with the host computer.
Refer to “11.1 Communication Command List (11-1 to 11-20)” for setting the control parameters such as SV and alarm required for operation.

12.1 Control Permission

(1) Before turning the power ON

Check the following contents before turning the power ON to this instrument.

- Preparation of communication program
  A communication program is required to connect and use the host computer.
  Refer to “10 MODBUS Protocol (10-1)” to create the communication program.
- Select communication specifications
  Select the communication specifications such as communication speed, data bit, and parity.
  Refer to “5.1.1 Selection of Communication Specifications (5-1)”.
- Select module address
  Select the module address.
  Refer to “5.1.2 Selection of Module Address (5-3)”.
- Mounting
  Mount the control module QTC1-4 to the DIN rail.
  Refer to “6 Mounting (6-1)”.
- Wiring
  Wire the control module QTC1-4.
  Refer to “7 Wiring (7-1)”.
- Connection of host computer and control module QTC1 4
  Connect the host computer and control module QTC1-4.
  Refer to “7.5 Connection of Host Computer and Control Module QTC1 4 (7-8)”.

(2) After turning the power ON

Check the following contents after turning the power ON to this instrument.

- Specification setting
  Set specifications such as input parameters and output parameters.
  Refer to “8 Setting of Specification (8-1 to 8-41)”.
- Control parameters setting
  Set the control parameters such as SV and alarm.
  Refer to “11.1 Communication Command List (11-1 to 11-20)”.

(3) Turn ON the load circuit power

(4) Permission of control

Select “Control Allowed” in “Control Allowed/Prohibited”.

The control operation starts so that the controlled object keeps CH1 SV.

Control Allowed [Slave address 1, Control Allowed/Prohibited of CH1]

- A request message from the master

Idle 3.5 characters	Slave address (01H)	Function code (06H)	Data item (0004H)	Data (0001H)	Error check CRC-16 (09CBH)	Idle 3.5 characters
	1	1	2	2	2	

- Response message from the slave in normal status

Idle 3.5 characters	Slave address (01H)	Function code (06H)	Data item (0004H)	Data (0001H)	Error check CRC-16 (09CBH)	Idle 3.5 characters
	1	1	2	2	2	

12.2 Set PID Constants (Execute AT)

⚠ Caution

- Perform the AT during the trial run.
- During AT, the all setting items can not be set.
- If a power failure occurs during AT execution, AT will be stopped.
- If AT is cancelled during the process, each setting values of P, I, D will revert to the values before AT was performed.
- If AT does not end about 4 hours after starting AT, AT is automatically stopped.
- If AT is executed near normal temperature, the temperature may not change and AT may not end normally.
- When AT is executed under Gap-PID control, D is calculated in 0 seconds.

Execute AT to set the PID constant.

There are two types of AT for this instrument, Normal AT and Start-up AT.

Refer to “AT action mode selection (00E0H to 00E3H) (11-7)” for AT action selection.

Start-up AT [Slave address 1, AT action of CH1]

- A request message from the master

Idle 3.5 characters	Slave address (01H)	Function code (06H)	Data item (00E0H)	Data (0001H)	Error check CRC-16 (49FCH)	Idle 3.5 characters
	1	1	2	2	2	

- Response message from the slave in normal status

Idle 3.5 characters	Slave address (01H)	Function code (06H)	Data item (00E0H)	Data (0001H)	Error check CRC-16 (49FCH)	Idle 3.5 characters
	1	1	2	2	2	

12.2.1 Normal AT

In order to set each value of P, I, D and ARW automatically, the AT process should be made to fluctuate to obtain an optimal value.

For DC voltage, current inputs, the AT process will fluctuate around the SV for conditions of [A], [B] and [C] below. One of 3 types of fluctuation below is automatically selected depending on the deviation between SV and PV.

When AT is executed under Gap-PID control, D is calculated in 0 seconds.

[A] If there is a large difference between the SV and PV as the temperature is rising

When AT bias is set to 20 °C (°F), AT process will fluctuate at the temperature 20 °C (°F) lower than the SV.

(Abbreviation: Temp.: Temperature)

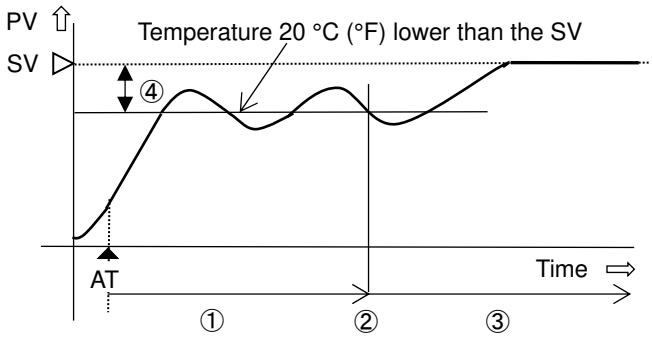

①: Calculates PID constants.
②: PID constants calculated
③: Controlled by the PID constants set by AT.
④: AT bias value (Factory default: 20 °C)

AT: AT starting point

(Fig. 12.2.1-1)

[B] When the control is stable

The AT process will fluctuate around the SV.

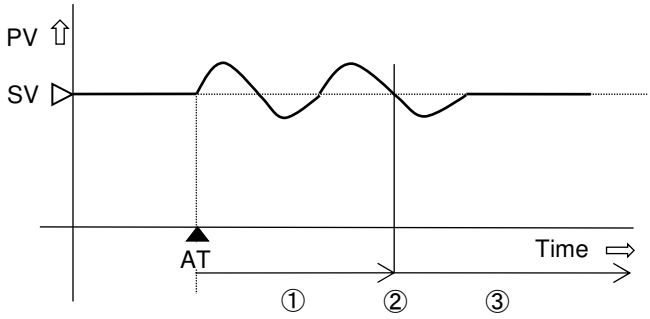

①: Calculates PID constants.
②: PID constants calculated
③: Controlled by the PID constants set by AT.

AT: AT starting point

(Fig. 12.2.1-2)

[C] If there is a large difference between the SV and PV as the temperature is falling

When AT bias is set to 20 °C (°F), AT process will fluctuate at the temperature 20 °C (°F) higher than the SV.

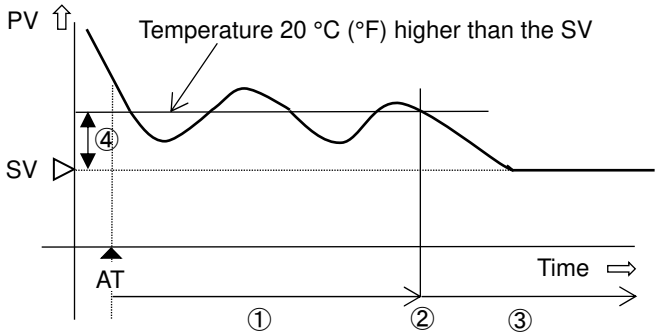

①: Calculates PID constants.
②: PID constants calculated
③: Controlled by the PID constants set by AT.
④: AT bias value (Factory default: 20 °C)

AT: AT starting point

(Fig. 12.2.1-3)

12.2.2 Start-up AT

Start-up AT calculates each set value of P, I, D only in the temperature rising state when normal AT is not performed due to temperature interference.
The Start-up AT is not executed for "Heating/Cooling Control" or "Direct action". Select "Normal AT" in "AT Action" and execute.

The start-up AT execution selection value is stored inside this instrument. Therefore, if "Control enable/disable" is selected for "Control enable", Start-up AT is executed every time.
If you want to stop the Start-up AT, select "Normal AT" in "AT Action".

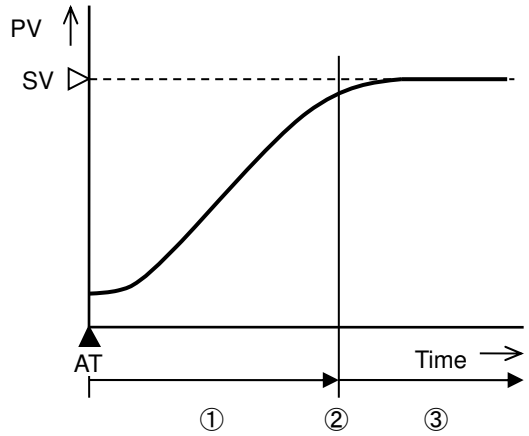

①: AT measurement in progress
②: PID constants calculated
③: Controlled by PID constant set by startup AT

(Fig. 12.2.2-1)

[Start-up AT execution conditions]

- At the start of Start-up AT, if the deviation between SV and PV is more than twice the proportional band, select Start-up AT with "AT Action" and select "AT Perform (Start-up with AT Perform/Cancel". If you select "Run AT", Start-up AT is executed. However, if the PV slope and delay time cannot be measured normally to calculate P, I, and D, Start-up AT is stopped.
  Even after Start-up AT is completed normally, "AT Perform/Cancel" remains "AT Perform".
  Under the above execution conditions, if "Control enable" is selected in "Control enable/disable", Start-up AT is executed again.
  If you want to stop Start-up AT, select "Normal AT" in "AT Action".

[Start-up AT stop conditions]

- When "Control disable" is selected in "Control enable/disable"
- When the derivative time is set to 0
- When the input burned out

12.2.3 AT Gain Setting

Set the ratio of the proportional band calculated by AT and Start-up AT.
Please set if necessary.
Setting range: 0.1 to 10.0 times (factory default: 1.0 times)

12.2.4 Executing AT

Refer to "AT Perform/Cancel selection (0008H to 000BH) (11-2)" and select "AT Perform".

AT Perform [Slave address 1, AT Perform/Cancel of CH1]

- A request message from the master

Idle 3.5 characters	Slave address (01H)	Function code (06H)	Data item (0008H)	Data (0001H)	Error check CRC-16 (C9C8H)	Idle 3.5 characters
	1	1	2	2	2	

- Response message from the slave in normal status

Idle 3.5 characters	Slave address (01H)	Function code (06H)	Data item (0008H)	Data (0001H)	Error check CRC-16 (C9C8H)	Idle 3.5 characters
	1	1	2	2	2	

During AT execution, set "AT Perform (1)" in B1: AT Perform/Cancel of Status flag 1 (1012H to 1015H).
When AT ends, B1: AT Perform/Cancel of Status flag 1 (1012H to 1015H) is set to "AT Cancel (0)", and control is performed with the PID constant set in AT.

If AT does not end about 4 hours after starting AT, AT is automatically stopped.

12.3 Set Alarm

For Alarm output, the alarm value is set by deviation from the SV (excluding Process alarm), and if the PV goes outside the range, the Alarm output is turned ON (turned OFF for High/Low limit range alarm).

It can select from High limit alarm, Low limit alarm, High/Low limits alarm, High/Low limit range alarm, Process high alarm, Process low alarm, High limit with standby alarm, Low limit with standby alarm, High/Low limits with standby alarm, High/Low limits alarm individually, High/Low limit range alarm individually, High/Low limits with standby alarm individually or no operation.

Refer to “14.5.3 Alarm Action (14-31)” for detail of alarm action.

Alarm settings are made using Alarm action and Alarm value.

If the operation is changed with Alarm 1 action to Alarm 4 action (0038H to 0047H), Alarm 1 value to Alarm 4 value (0058H to 0077H) will return to the factory default values.

Send the Alarm action and then the Alarm value.

This section describes the CH1 alarm 1 setting example and alarm operation.

[Setting example]

Setting item	Setting value
SV	600 °C
Alarm 1 type	Hogh limit alarm
Alarm 1	20 °C
Alarm 1 hysteresis	1.0 °C

[Alarm action]

When PV will be more than 620 °C, Alarm 1 output turns ON.

When PV will be less than 619 °C, Alarm 1 output turns OFF.

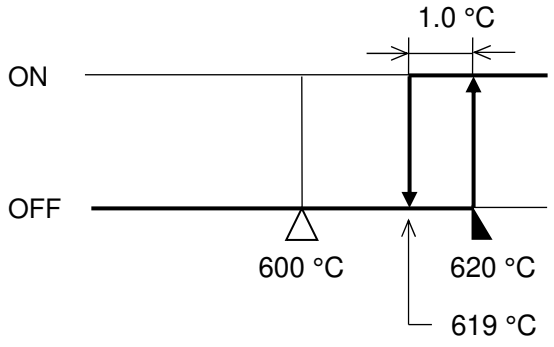

(Fig. 12.3-1)

High limit alarm [Slave address 1, Alarm 1 type of CH1]

- A request message from the master

Idle 3.5 characters	Slave address (01H)	Function code (06H)	Data item (0038H)	Data (0001H)	Error check CRC-16 (C9C7H)	Idle 3.5 characters
	1	1	2	2	2	

- Response message from the slave in normal status

Idle 3.5 characters	Slave address (01H)	Function code (06H)	Data item (0038H)	Data (0001H)	Error check CRC-16 (C9C7H)	Idle 3.5 characters
	1	1	2	2	2	

20 °C (0014H) [Slave address 1, Alarm 1 of CH1]

- A request message from the master

Idle 3.5 characters	Slave address (01H)	Function code (06H)	Data item (0058H)	Data (0014H)	Error check CRC-16 (0816H)	Idle 3.5 characters
	1	1	2	2	2	

- Response message from the slave in normal status

Idle 3.5 characters	Slave address (01H)	Function code (06H)	Data item (0058H)	Data (0014H)	Error check CRC-16 (0816H)	Idle 3.5 characters
	1	1	2	2	2	

12.4 Correct Process Variable

When a sensor cannot be set at the exact location where control is desired, the sensor-measured temperature may deviate from the temperature in the controlled location. When using multiple indicating controllers, sometimes the measured temperatures do not concur due to differences in sensor accuracy or dispersion of load capacities. In such a case, the control can be set at the desired temperature by adjusting the input value of sensors. However, it is effective within the input rated range regardless of the sensor correction value.

The input value is corrected by the sensor correction coefficient and the sensor correction.
The sensor correction coefficient sets the slope, and the sensor correction sets the difference between before and after correction.

PV after input correction is expressed by the following formula.
PV after input correction =

Current PV × Sensor correction factor setting value + (Sensor correction setting value)

An example of input value correction using a combination of Sensor correction factor and Sensor correction is shown below.

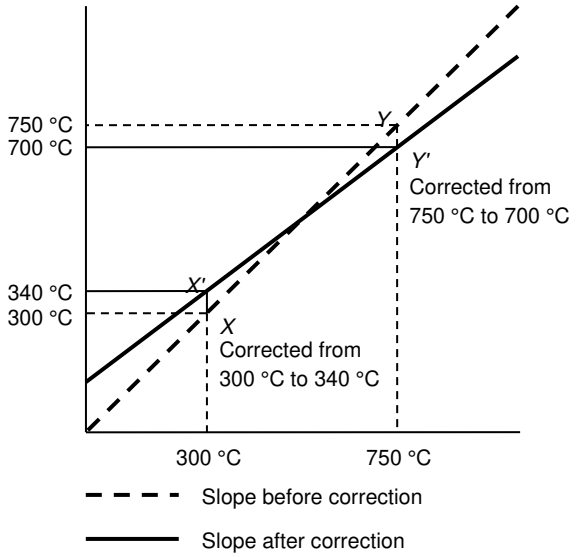

(Fig. 12.4-1)

(1) Extract two points to be corrected and determine the PV after correction.
Before correction: 300 °C → After correction: 340 °C
Before correction: 750 °C → After correction: 700 °C
(2) Find the sensor correction coefficient setting value from (1).
(Y' - X') / (Y - X) = (700 - 340) / (750 - 300) = 0.8
(3) It is input so that PV will be 300 °C using a mV generator and dial resistor.
(4) Set the value of (2) to the sensor correction coefficient.
(5) Read PV.
It is displayed as 240 °C.
(6) Find the sensor correction setting value.
Find the difference between the PV after input correction and the PV read in (5).
340 °C - 240 °C = 100 °C
(7) Set the value of (6) to the sensor correction.
(8) Input an electromotive force or resistance value equivalent to 750°C using a mV generator or dial resistor.
(9) Read PV and check that the display is 700 °C.

[Setting Example] When set Sensor correction coefficient: 0.800, Sensor correction: 100.0 °C

0.800(0320H) [Slave address 1, Sensor correction coefficient of CH1]

- A request message from the master

Idle 3.5 characters	Slave address (01H)	Function code (06H)	Data item (0084H)	Data (0320H)	Error check CRC-16 (C8CBH)	Idle 3.5 characters
	1	1	2	2	2	

- Response message from the slave in normal status

Idle 3.5 characters	Slave address (01H)	Function code (06H)	Data item (0084H)	Data (0320H)	Error check CRC-16 (C8CBH)	Idle 3.5 characters
	1	1	2	2	2	

100.0 °C (03E8H) [Slave address 1, Sensor correction of CH1]

- A request message from the master

Idle 3.5 characters	Slave address (01H)	Function code (06H)	Data item (0088H)	Data (03E8H)	Error check CRC-16 (095EH)	Idle 3.5 characters
	1	1	2	2	2	

- Response message from the slave in normal status

Idle 3.5 characters	Slave address (01H)	Function code (06H)	Data item (0084H)	Data (03E8H)	Error check CRC-16 (095EH)	Idle 3.5 characters
	1	1	2	2	2	

12.5 Auto/Manual Control Switch

Switching between Automatic control and Manual control is done by Auto/Manual control.

If control action is switched from automatic to manual and vice versa, balanceless-bumpless function works to prevent a sudden change in MV.

With Manual control, MV can be set arbitrarily.

Set MV with Manual MV.

Auto/Manual control is Automatic control when the instrument power is turned ON.

[Setting Example] When set Auto/Manual control: Manual control, Manual MV: 20.0 %

Manual control [Slave address 1, Auto/Manual control of CH1]

- A request message from the master

Idle 3.5 characters	Slave address (01H)	Function code (06H)	Data item (0010H)	Data (0001H)	Error check CRC-16 (49CFH)	Idle 3.5 characters
	1	1	2	2	2	

- Response message from the slave in normal status

Idle 3.5 characters	Slave address (01H)	Function code (06H)	Data item (0010H)	Data (0001H)	Error check CRC-16 (49CFH)	Idle 3.5 characters
	1	1	2	2	2	

20.0 % (00C8H) [Slave address 1, Manual MV of CH1]

- A request message from the master

Idle 3.5 characters	Slave address (01H)	Function code (06H)	Data item (0014H)	Data (00C8H)	Error check CRC-16 (C858H)	Idle 3.5 characters
	1	1	2	2	2	

- Response message from the slave in normal status

Idle 3.5 characters	Slave address (01H)	Function code (06H)	Data item (0014H)	Data (00C8H)	Error check CRC-16 (C858H)	Idle 3.5 characters
	1	1	2	2	2	

13 Communication with PLC Using SIF Function

The SIF function (Smart InterFace, programless communication function) is a function that serially connects the PLC Q series (manufactured by Mitsubishi Electric Corp.) and this instrument, and reads and writes various data to and from PLC registers using the communication protocol of the PLC.
The following communication protocols and commands are supported.

Communication protocol	Format 4
Communication command	A compatible 1C frame AnA/AnU common command (QR/QW)

Using the console software (SWC-QTC101M), select the PLC register start number, PLC register address, the monitoring items and setting items to be linked, and set the specifications.

The control module QTC1-4P (with power supply / communication option) becomes the master, and the selected monitor item is periodically written to the PLC register by using the QW command, and the value of the PLC register is constantly updated.
In addition, the selected setting items are read from the PLC register in response to a setting request using the QR command.
When the read data is changed, the set value of control module QTC1-4P (with power supply / communication option) or control module QTC1-40 (no power supply / communication option) is updated.

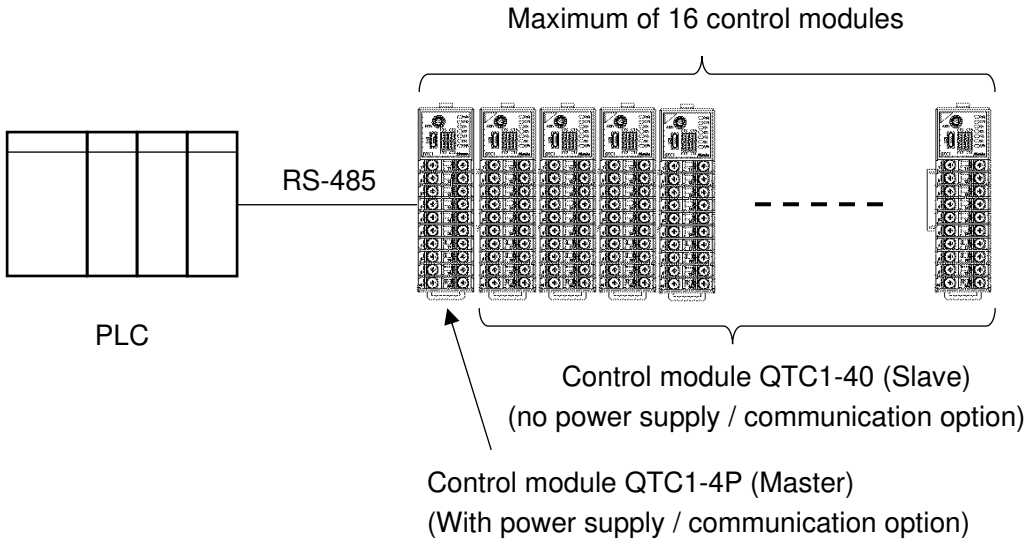

(Fig. 13-1)

13.1 Flow of Before Operation

The flow up to operation when connected to a PLC is shown below.

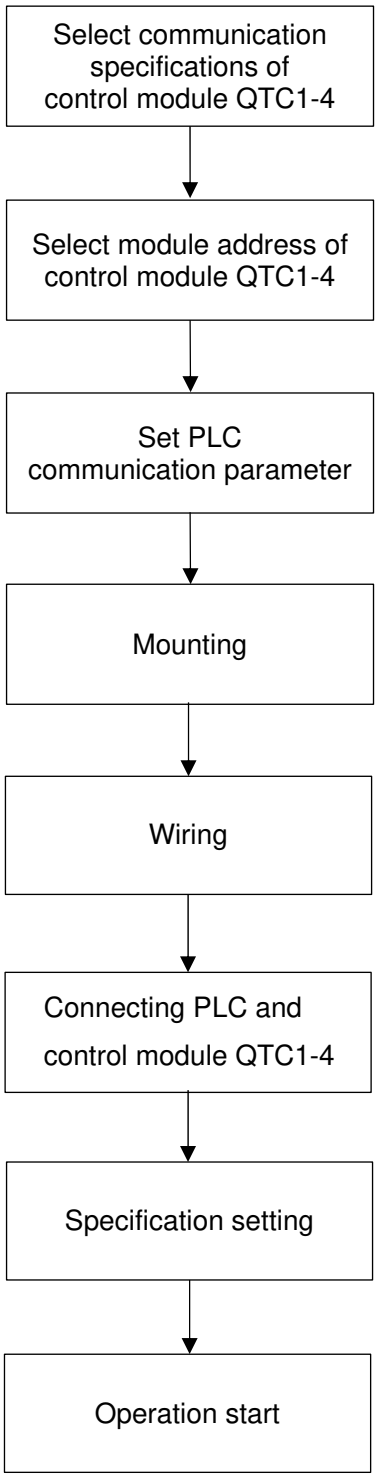

Select the communication specifications such as communication speed, data bit, parity of the control module QTC1-4.
Refer to “5.1.1 Selection of Communication Specifications (5-1)”.

Select the module address of the control module QTC1-4.
Refer to “5.1.2 Selection of Module Address (5-3)”.

Set the PLC communication parameters.
Refer to “13.2 PLC Communication Parameter Setting (13-3)”.

Mount the control module QTC1-4 to the DIN rail.
Refer to “13.3 Mounting (13-6)”.

Wire the control module QTC1-4.
Refer to “13.3 Wiring (13-8)”.

Connect the PLC and control module QTC1-4P.
Refer to “13.5 Connection of PLC and Control Module QTC1-4 (13-12)”.

Set the communication settings with PLC.
Refer to “13.6 Specification Setting (13-14)”.

Communication is performed between the QTC1-4P and PLC, and operation starts.
Refer to “13.7 Operation (13-24)”.

(Fig. 13.1-1)

13.2 PLC Communication Parameter Setting

Set the PLC communication parameters.

The setting method using GX Developer is explained.

Connect the GX Developer installed PC, set the communication speed, transmission specifications, communication protocol, etc., and then set the communication parameters using the PC write function. Refer to “Serial Communication Module User's Manual (Basic)” for detail.

(1) I/O assignment setting

Double-click [PLC parameter] on Project data list -> Parameter.

Display the parameter setting screen.

Click “I/O assignment setting” tab, and set “Type”, “Model Name” and “Point”.

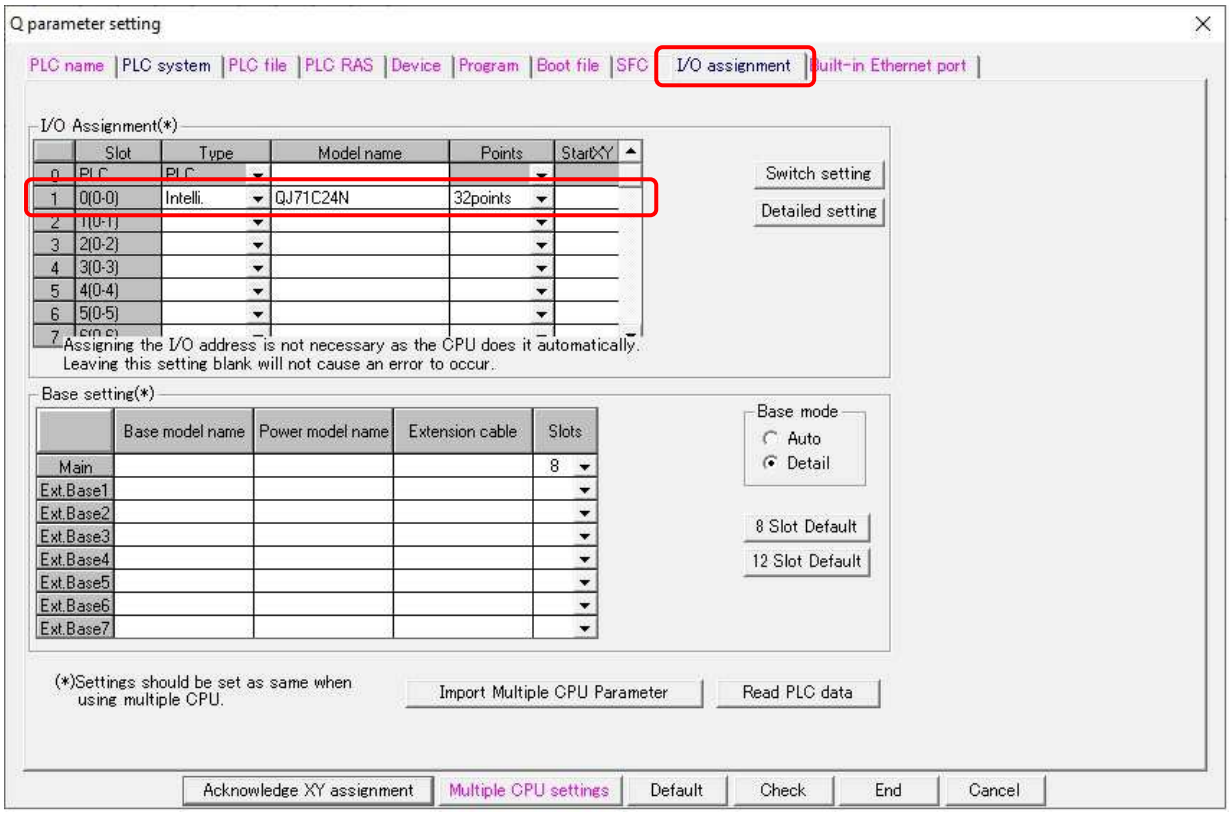

(Fig. 13.2-1)

[Setting Example]

Setting item	Setting contents
Type	Intelligent
Model Name	Model name of mounted unit (Example: QJ71C24N)
Point	32 points

(2) Switch setting

Click [Switch setting] button to the right of the I/O assignment setting.

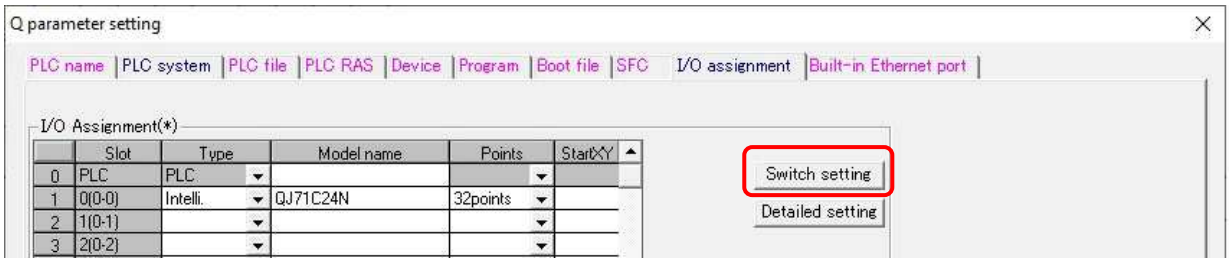

(Fig. 13.2-2)

Displays the Switch setting for I/O and intelligent function module screen.

Set the data bit, parity bit, stop bit, communication speed and communication protocol settings.

After setting, click [End] button.

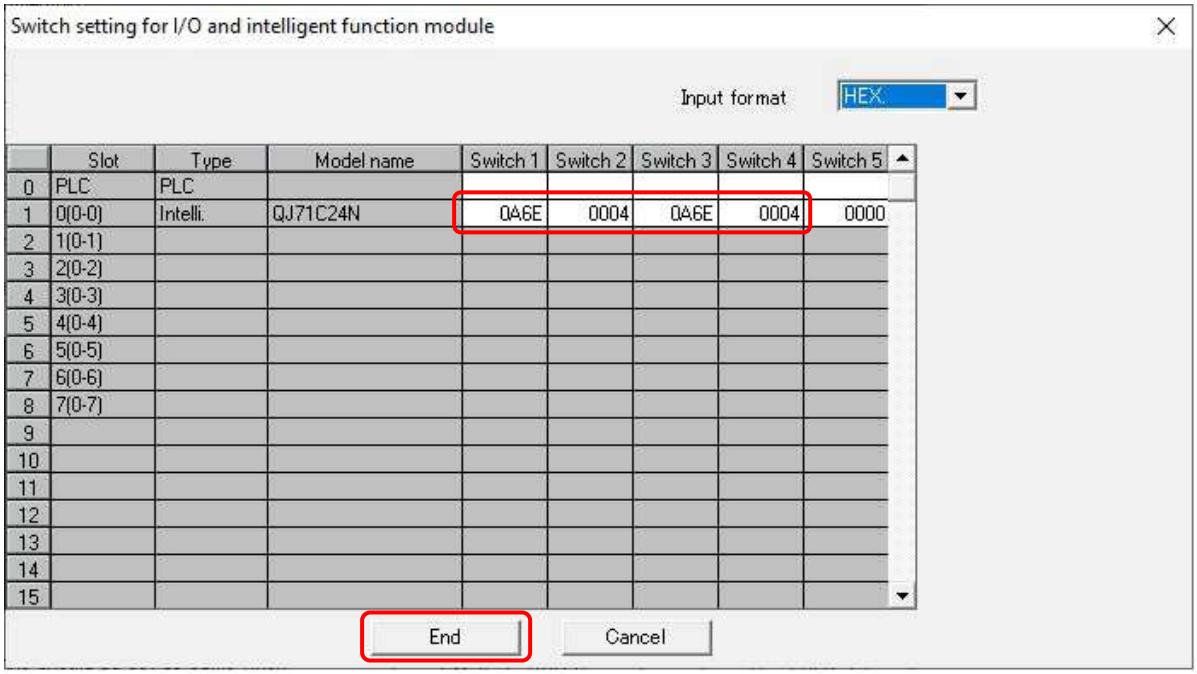

(Fig. 13.2-3)

[Setting Example]

Setting item	Setting contents
Action setting	Independent
Data bit	8 bits
Parity bit	Even
Stop bit	1 bit
Sum check code	Yes
Write during RUN	Enable
Setting change	Disable
Communication speed setting	Set the same communication speed as the control module QTC1-4 (Setting example: 57600 bps)
Communication protocol setting	Format 4

(3) PLC writing

Click [Write to PLC...] on Menu bar -> Online.

Display the PC writing screen.

Click [Select all] button -> [Execute] button.

This completes the PLC communication parameter settings.

13.3 Mounting

Mounting to the DIN rail

① Lower the lock lever of this instrument. (The lock lever of this instrument has a spring structure, but if lower it in the direction of the arrow until it stops, it will be locked in that position.)

② Hook the part ② of this instrument onto the top of the DIN rail.

③ Insert the lower part of this instrument with the part ② as a fulcrum.

④ Raise the lock lever of this instrument.
Make sure it is fixed to the DIN rail.

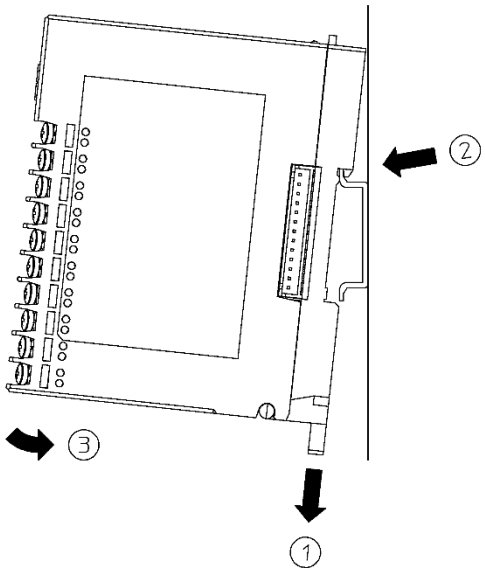

(Fig. 13.3-1)

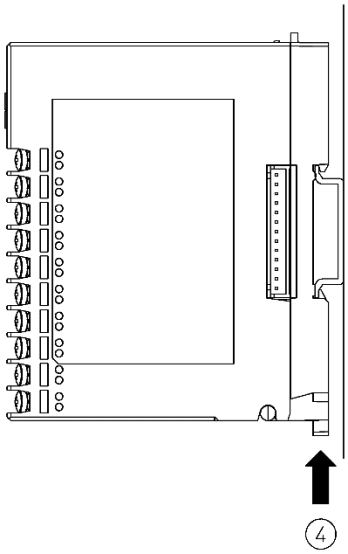

(Fig. 13.3-2)

Removal from the DIN rail

① Insert a flat blade screwdriver into the lock lever of this instrument and lower the lock lever until it stops.

② Remove this instrument from the DIN rail by lifting it from below.

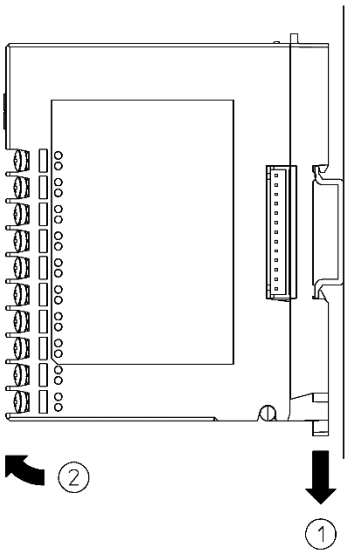

(Fig. 13.3-3)

Mounting multiple modules to the DIN rail

This section describes an example of mounting multiple control modules QTC-4 on the DIN rail.

① Remove the line cap on the right side of the QTC1-4P.

② Lower the lock lever of the QTC1-40, and mounting the QTC1-40 to the DIN rail.

③ Slide the QTC1-40 to the left and connect the connectors to each other.

④ Raise the lock lever of this instrument.
Make sure it is fixed to the DIN rail.

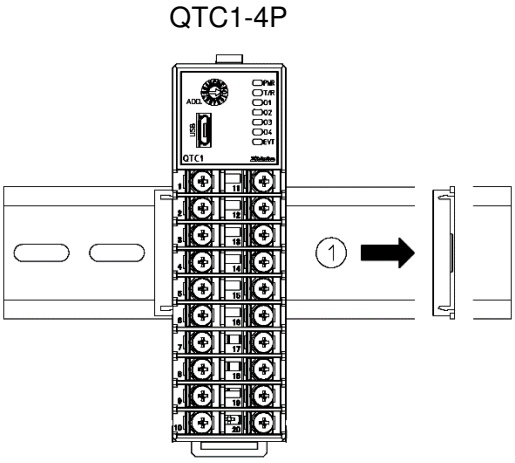

(Fig. 13.3-4)

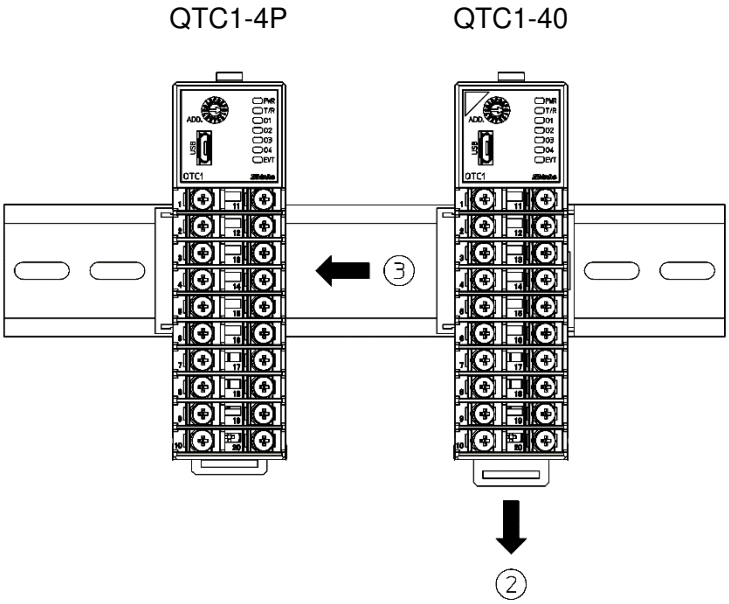

(Fig. 13.3-5)

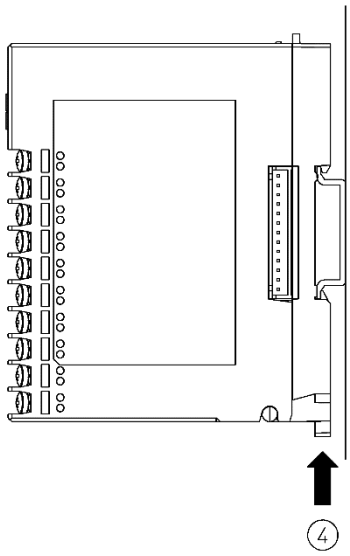

(Fig. 13.3-6)

13.4 Wiring

13.4.1 Wiring for Power Supply and Serial Communication

The terminal block for power supply and serial communication is located on the base of this instrument.

Wiring by the following procedure.

(1) Case removal

① Push the release lever on the top of this instrument to unlock it.

② Remove the case.

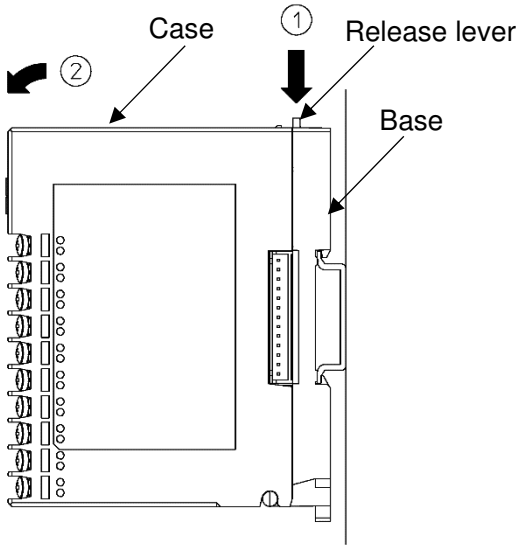

(Fig. 13.4.1-1)

(2) Wiring

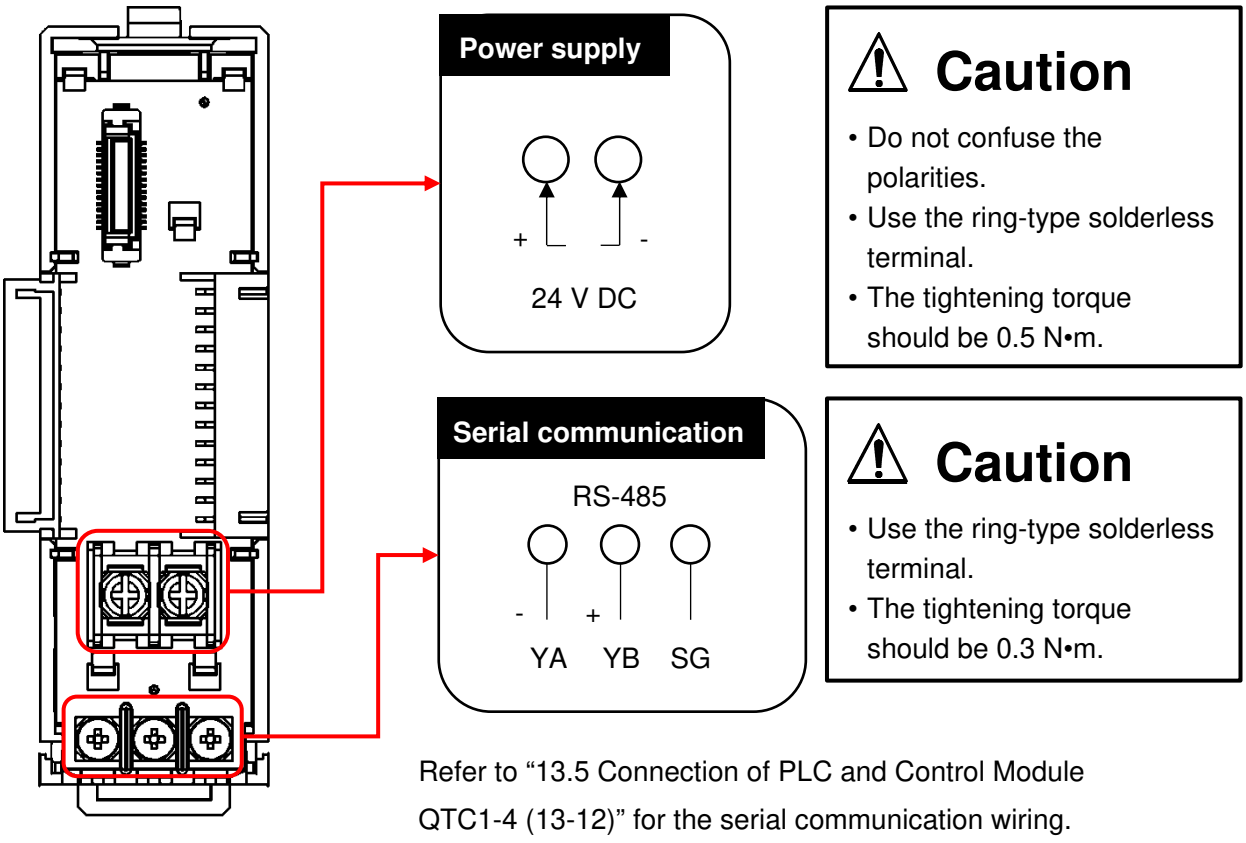

Refer to “13.5 Connection of PLC and Control Module QTC1-4 (13-12)” for the serial communication wiring.

(Fig. 13.4.1-2)

(3) Case mounting

① Hook the case on the lower part ① of this instrument.

② Mount the case so that the lower part ① of this instrument is the fulcrum and covers the release lever.
There is a clicking sound.

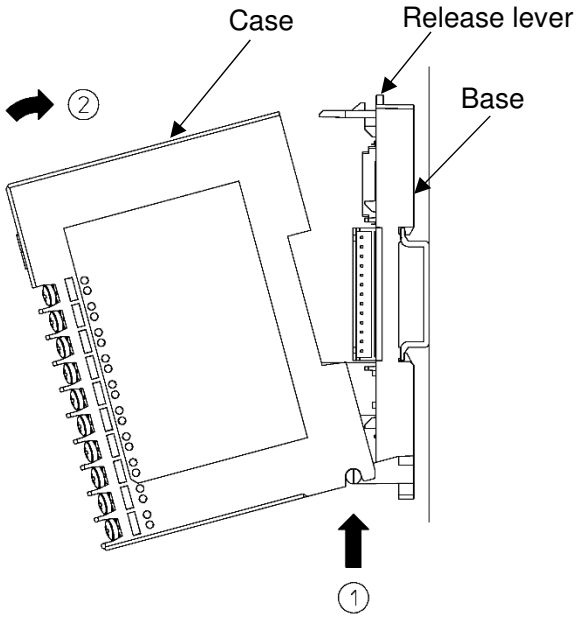

(Fig. 13.4.1-3)

13.4.2 Wiring for Input, Output and CT

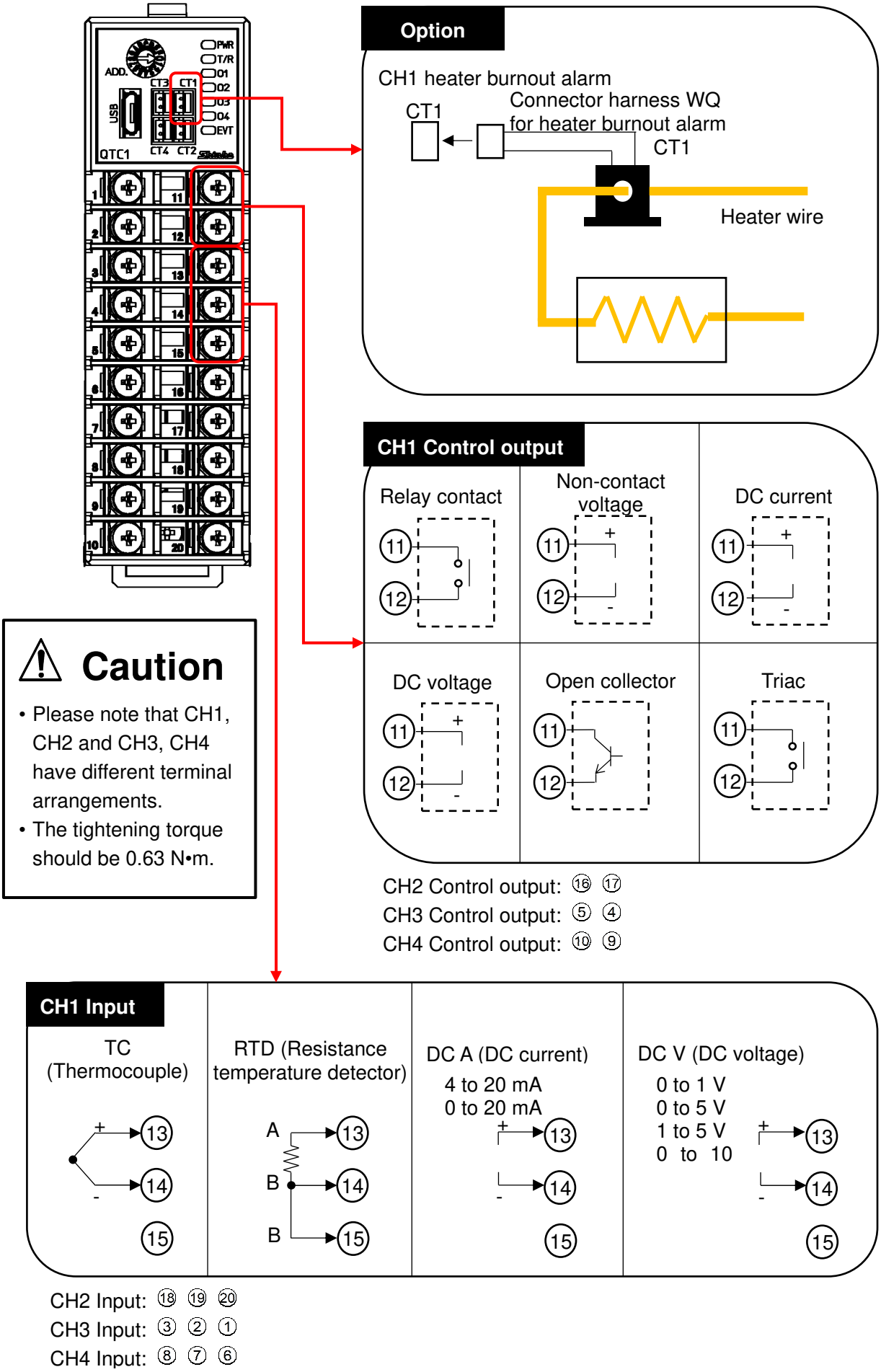

Caution

- Please note that CH1, CH2 and CH3, CH4 have different terminal arrangements.
- The tightening torque should be 0.63 N•m.

(Fig. 13.4.2-1)

13.4.3 Wiring for Event Input and Event Output

Using the connector harness EVQ for event input/output.

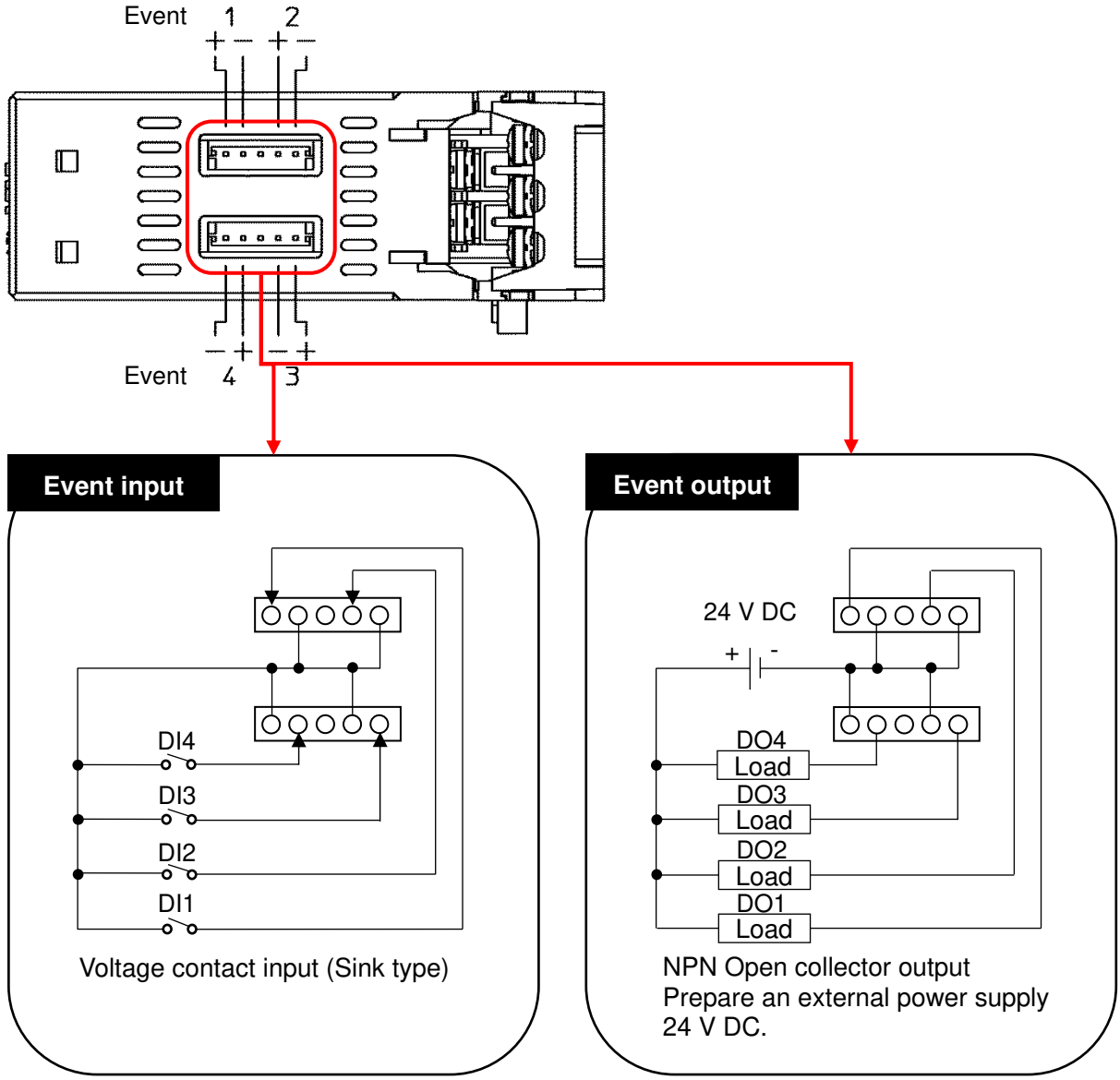

(Fig. 13.4.3-1)

13.5 Connection of PLC and Control Module QTC1-4

⚠ Warning

Turn off the power supply to this instrument before wiring.
If you work while the powe r is supplied, you may get an electric shock, which could result in an accident resulting in death or serious injury.

⚠ Caution

Do not connect two or more control module QTC1-4P (with power supply / communication option) in one unit.

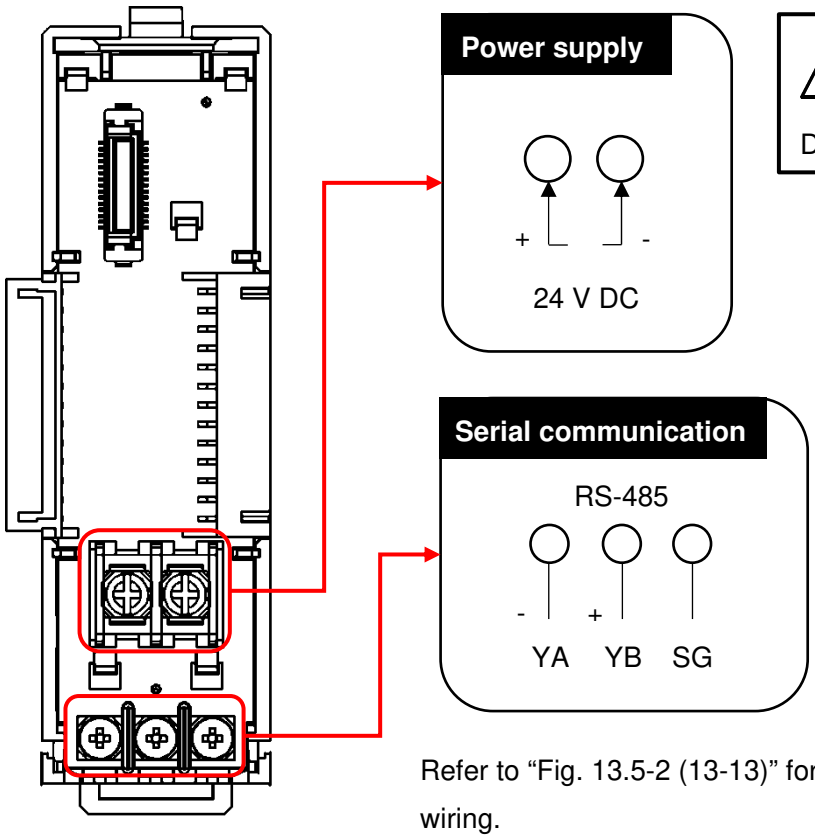

⚠ Caution

Do not confuse the polarities.

Refer to “Fig. 13.5-2 (13-13)” for the serial communication wiring.

(Fig. 13.5-1)

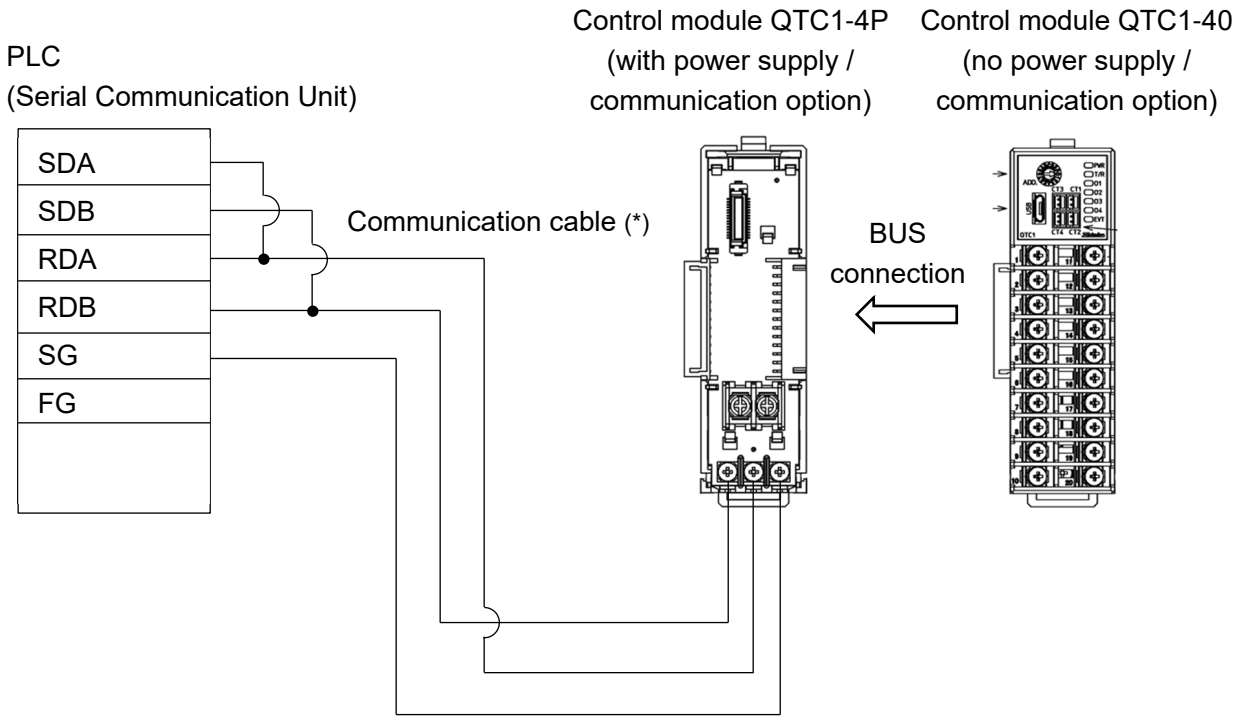

(*): For communication cables, please contact the store where you purchased the product or our sales office.

(Fig. 13.5-2)

13.6 Specification Setting

Set the specifications of the control module to communicate with the PLC.

This section describes how to set specifications using console software (SWC-QTC101M).

13.6.1 Preparation of USB Communication Cable and Console Software

Please prepare the USB communication cable and the console software.

- USB communication cable

  USB-micro USB Type-B (commercial item)
- Console software (SWC-QTC101M)

  Please download from our website and install.

  Click http://www.shinko-technos.co.jp/e/index.html → Support/Download → Software

13.6.2 Connecting to Host Computer

(1) Connect the micro USB Type-B side of the USB communication cable to the console communication connector of this instrument.

(2) Connect the USB plug of the USB communication cable to the USB port of the host computer.

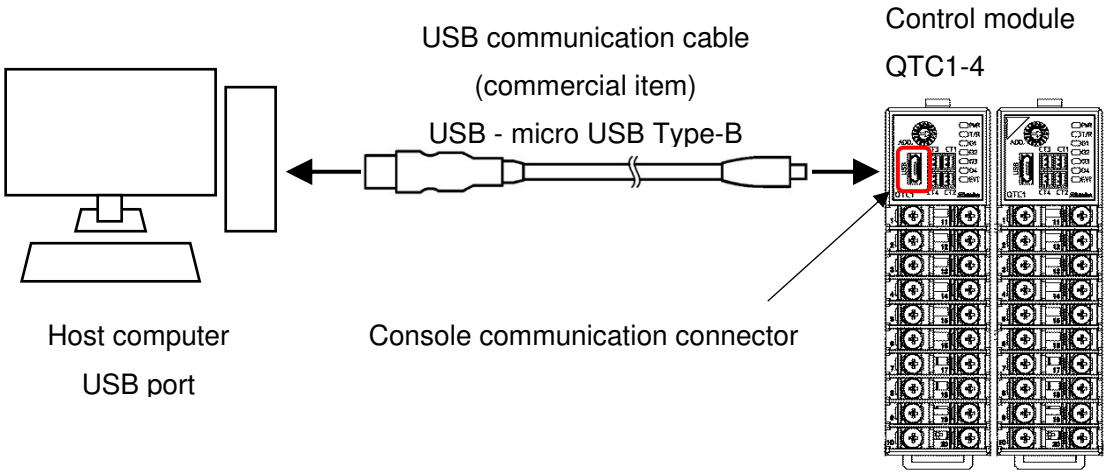

(Fig. 13.6.2-1)

(3) Checking the COM port number

Follow the procedure below to check the COM port number.

① Right-click “Start” → Click “Device manager” from menu.

② When “USB Serial Port (COM3)” is displayed in “Port (COM and LPT)”, the COM port is assigned to No. 3.

Check the COM port number, and then close “Device Manager”.

③ Start the console software (SWC-QTC101M).

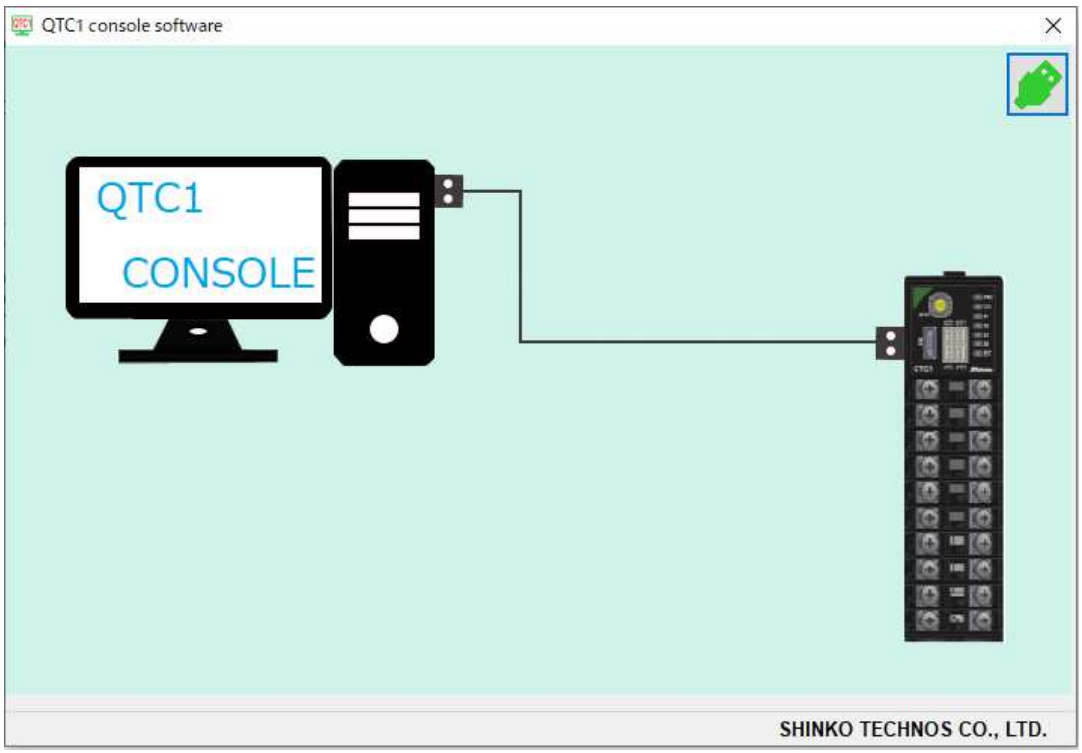

(Fig. 13.6.2-2)

④ Click [User (U)] on the menu bar → [Communication condition (C)].

Display the communication condition setting screen.

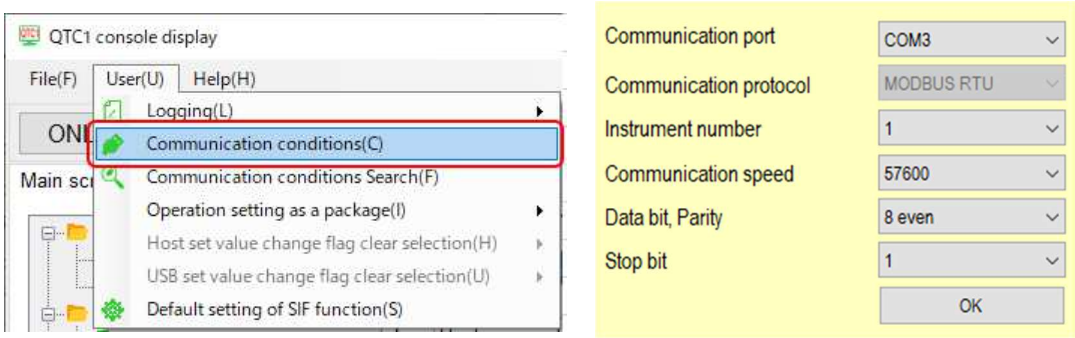

(Fig. 13.6.2-3)

⑤ Set the communication condition as shown below.

Setup Items	Setting Value
Communication port	Select the COM port number confirmed in (2).
Communication protocol	MODBUS RTU

⑥ Click [OK]

⑦ Click “Default setting of SIF function(S)” from “User(U)” of menu ber.

Display “Default setting of SIF function” screen.

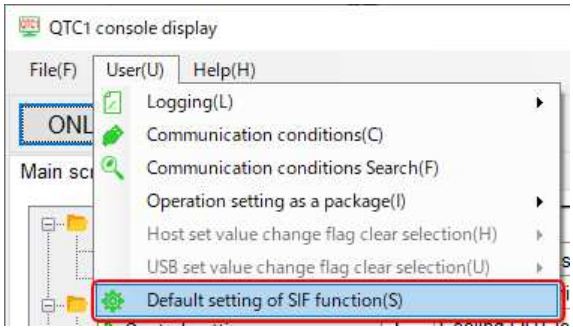

(Fig. 13.6.2-4)

⑧ Select “Module 1” and click “System” tab.

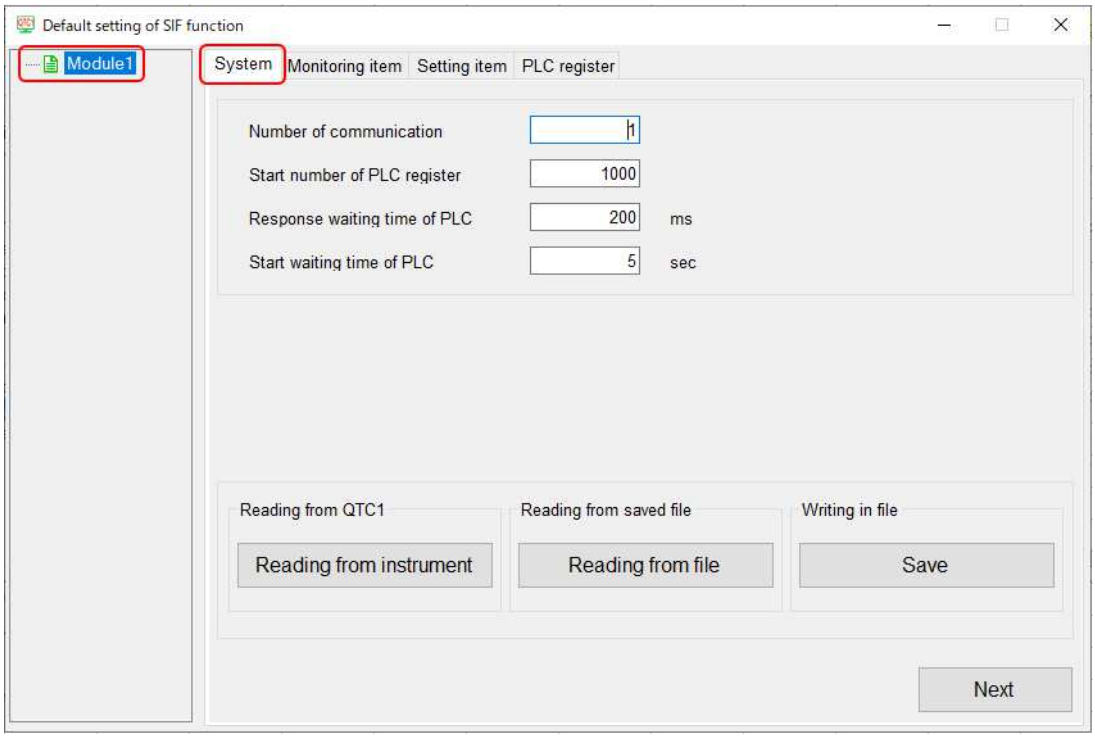

(Fig. 13.6.2-5)

The specifications are ready.

13.6.3 Specification Setting

SIF function initial setting screen

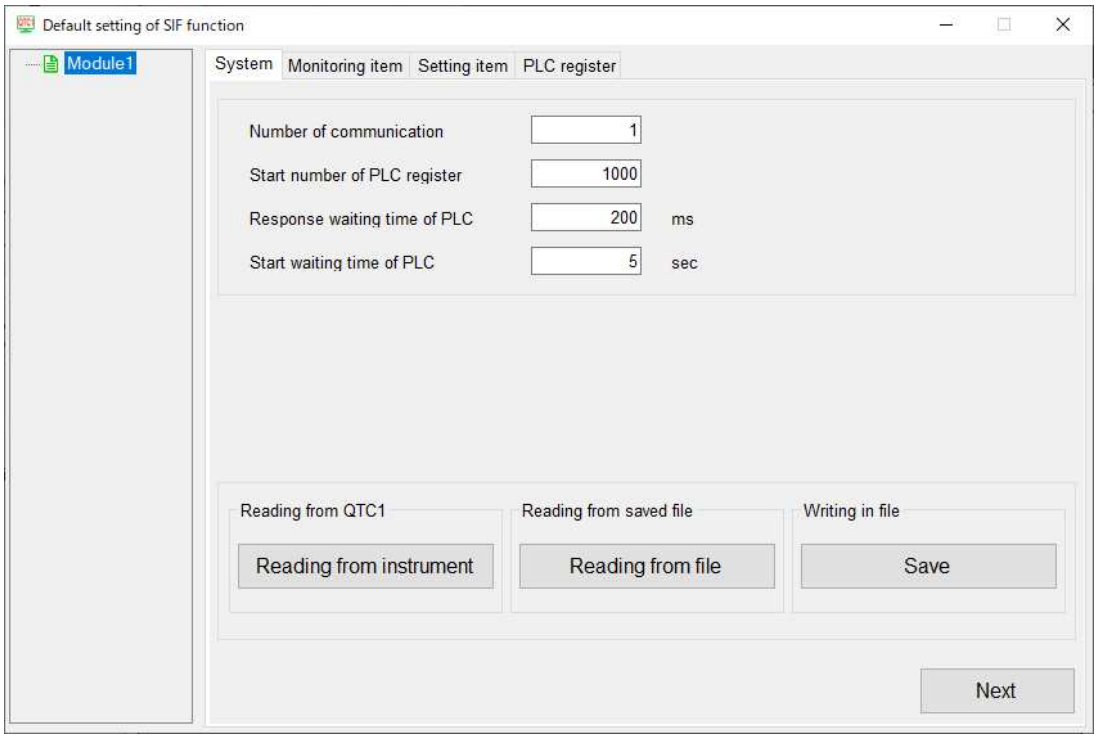

(Fig. 13.6.3-1)

Set the specifications referring to the SIF function initial setting items.

SIF function initial setting items

MODBUS address		Name	Settings • Selection range	Initial value	Remarks (*)
HEX	DEC				
020A	522	Communication management module number setting	1 to 16 modules	1	1
0384	900	PLC register start number	0 to 65535	1000	0
0385	901	PLC response wait time	100 to 3000 ms	200	1
0386	902	PLC communication start wait time	1 to 255 seconds	5	1
0387	903	Reservation (Not used)		0	0
0388	904	Reservation (Not used)		0	0
0389	905	Monitor item 1	Refer to Monitor item 1 (13-18)	31	0
038A	906	Monitor item 2	Refer to Monitor item 2 (13-19)	0	0
038B	907	Monitor item 3	Refer to Monitor item 3 (13-19)	0	0
038C	908	Reservation (Not used)		0	0
038D	909	Reservation (Not used)		0	0
038E	910	Setting item 1	Refer to Setting item 1 (13-20)	57827	0
038F	911	Setting item 2	Refer to Setting item 2 (13-20)	2721	0
0390	912	Setting item 3	Refer to Setting item 3 (13-21)	0	0
0391	913	Setting item 4	Refer to Setting item 4 (13-21)	0	0
0392	914	Setting item 5	Refer to Setting item 5 (13-22)	0	0
0393	915	Setting item 6	Refer to Setting item 6 (13-22)	0	0
0394	916	Setting item 7	Refer to Setting item 7 (13-23)	0	0

(*) 0: The value set in each control module QTC1-4 is a valid item.
1: The value set in the control module QTC1-4P is a valid item.

(1) Communication management module number setting

Set the number of modules managed by the master module.
Set the number of modules including the master module.

(2) PLC register start number

Set the start number of the register used in PLC communication. It is fixed to the D register.
Please set in the range of 0 to 65535.
For A compatible 1C frame AnA/AnU, set within the range of 0 to 8191.
A maximum of 170 registers are used per control module. [System area: 10 registers, Monitor item: 80 registers (20 × 4ch), Setting item: 80 registers (20 × 4ch)]
When using multiple control modules, be careful not to duplicate them.

(3) PLC response wait time

Set the retransmission interval time when there is no response from the PLC.
Please set in the range of 100 to 3000 ms.

(4) PLC communication start wait time

Set the time from when the control module QTC1-4P power is turned on until communication is started to the PLC.
Please set in the range of 1 to 255 seconds.

(5) Monitor item 1 to 3

Click [Monitor item] tab or [Next] button.
Displays the Monitor item screen.
Select any of Monitor item 1 to 3. The maximum number of valid item selections is 20.
The excess is invalid for all channels in the control module.

Monitor item 1 (Initial value: 31)

Bit	No.	Selection	Description
0	01	1	PV reading (including difference)
1	02	1	MV reading
2	03	1	SV reading
3	04	1	Status flag 1 reading
4	05	1	Status flag 2 reading
5	06	0	Heater current value reading
6	07	0	Event input reading
7	08	0	Event output reading
8	09	0	PV reading (true value)
9	10	0	Ambient temperature reading
10	11	0	Not used
11	12	0	Not used
12	13	0	Not used
13	14	0	Not used
14	15	0	Not used
15	16	0	Not used

Monitor item 2 (Initial value: 0)

Bit	No.	Selection	Description
0	17	0	Alarm history 1 Error No.
1	18	0	Alarm history 2 Error No.
2	19	0	Alarm history 3 Error No.
3	20	0	Alarm history 4 Error No.
4	21	0	Alarm history 5 Error No.
5	22	0	Alarm history 6 Error No.
6	23	0	Alarm history 7 Error No.
7	24	0	Alarm history 8 Error No.
8	25	0	Alarm history 9 Error No.
9	26	0	Alarm history 10 Error No.
10	27	0	Alarm history 1 Total energizing time
11	28	0	Alarm history 2 Total energizing time
12	29	0	Alarm history 3 Total energizing time
13	30	0	Alarm history 4 Total energizing time
14	31	0	Alarm history 5 Total energizing time
15	32	0	Alarm history 6 Total energizing time

Monitor item 3 (Initial value: 0)

Bit	No.	Selection	Description
0	33	0	Alarm history 7 Total energizing time
1	34	0	Alarm history 8 Total energizing time
2	35	0	Alarm history 9 Total energizing time
3	36	0	Alarm history 10 Total energizing time
4	37	0	Integration time of contact switching (High)
5	38	0	Integration time of contact switching (Low)
6	39	0	Total energizing time (High, Low)
7	40	0	Cumulative electrification time of heater (High)
8	41	0	Cumulative electrification time of heater (Low)
9	42	0	Not used
10	43	0	Not used
11	44	0	Not used
12	45	0	Not used
13	46	0	Not used
14	47	0	Not used
15	48	0	Not used

(6) Setting item 1 to 7

Click [Setting item] tab or [Next] button.

Displays the Setting item screen.

Select any of Setting item 1 to 7. The maximum number of valid item selections is 20.

The excess is invalid for all channels in the control module.

Setting item 1 (Initial value: 57827)

Bit	No.	Selection	Description
0	1	1	Control Allowed/Prohibited selection
1	2	1	AT Perform/Cancel selection
2	3	0	Event output ON/OFF selection
3	4	0	Auto/Manual control selection
4	5	0	Manual MV setting
5	6	1	SV setting
6	7	1	Proportional band setting
7	8	1	Integral time setting
8	9	1	Derivative time setting
9	10	0	Proportional cycle setting
10	11	0	ON/OFF hysteresis setrting
11	12	0	Output high limit setting
12	13	0	Output low limit setting
13	14	1	Alarm 1 type selection
14	15	1	Alarm 2 type selection
15	16	1	Alarm 3 type selection

Setting item 2 (Initial value: 2721)

Bit	No.	Selection	Description
0	17	1	Alarm 4 type selection
1	18	0	Alarm 1 hysteresis setting
2	19	0	Alarm 2 hysteresis setting
3	20	0	Alarm 3 hysteresis setting
4	21	0	Alarm 4 hysteresis setting
5	22	1	Alarm 1 setting
6	23	0	Alarm 1 high limit setting
7	24	1	Alarm 2 setting
8	25	0	Alarm 2 high limit setting
9	26	1	Alarm 3 setting
10	27	0	Alarm 3 high limit setting
11	28	1	Alarm 4 setting
12	29	0	Alarm 4 high limit setting
13	30	0	Heater burnout alarm setting
14	31	0	Loop break alarm band setting
15	32	0	Loop break alarm time setting

Setting item 3 (Initial value: 0)

Bit	No.	Selection	Description
0	33	0	Sensor correction coefficient setting
1	34	0	Sensor correction setting
2	35	0	PV filter setting
3	36	0	SV rise rate setting
4	37	0	SV fall rate setting
5	38	0	MV bias setting
6	39	0	Not used
7	40	0	Not used
8	41	0	Not used
9	42	0	Not used
10	43	0	Not used
11	44	0	Not used
12	45	0	Not used
13	46	0	Not used
14	47	0	Not used
15	48	0	Not used

Setting item 4 (Initial value: 0)

Bit	No.	Selection	Description
0	49	0	Input type selection
1	50	0	Temperature unit selection
2	51	0	Scaling high limit setting
3	52	0	Scaling low limit setting
4	53	0	Input sampling selection
5	54	0	Direct/Reverse action selection
6	55	0	AT action mode selection
7	56	0	AT bias setting
8	57	0	ATgain setting
9	58	0	Alarm 1 value 0 Enabled/Disabled selection
10	59	0	Alarm 2 value 0 Enabled/Disabled selection
11	60	0	Alarm 3 value 0 Enabled/Disabled selection
12	61	0	Alarm 4 value 0 Enabled/Disabled selection
13	62	0	Event output allocation selection
14	63	0	Event input allocation selection
15	64	0	CH Enabled/Disabled selection

Setting item 5 (Initial value: 0)

Bit	No.	Selection	Description
0	65	0	Number of moving average setting
1	66	0	Input math function selection
2	67	0	Input difference selection
3	68	0	Input difference setting
4	69	0	Control action selection
5	70	0	Proportional gain 2 DOF coefficient (α) setting
6	71	0	Integral 2 DOF coefficient (β) setting
7	72	0	Derivative 2 DOF coefficient (γ, Cd) setting
8	73	0	SV proportional coefficient (Cp) setting
9	74	0	Gap width setting
10	75	0	Gap coefficient setting
11	76	0	Output minimum ON/OFF time setting
12	77	0	Integral/Derivative decimal point position selection
13	78	0	Restore action selection when power is turn on
14	79	0	Not used
15	80	0	Not used

Setting item 6 (Initial value: 0)

Bit	No.	Selection	Description
0	81	0	Control function selection
1	82	0	Cooling proportional band setting
2	83	0	Cooling integral time setting
3	84	0	Cooling derivative time setting
4	85	0	Cooling proportional cycle setting
5	86	0	Cooling ON/OFF hysteresis setting
6	87	0	Overlap/Dead band setting
7	88	0	Cooling output high limit setting
8	89	0	Cooling output low limit setting
9	90	0	Cooling action mode selection
10	91	0	Slave scale high limit setting
11	92	0	Slave scale low limit setting
12	93	0	Output bias setting
13	94	0	Output gain setting
14	95	0	Output channel selection
15	96	0	Output rate-of-change setting

Setting item 7 (Initial value: 0)

Bit	No.	Selection	Description
0	97	0	Communication response delay time setting
1	98	0	Extension function selection
2	99	0	Not used
3	100	0	Not used
4	101	0	Not used
5	102	0	Auto balance control Interlock/Alone selection
6	103	0	Auto balance control Master/Slave selection
7	104	0	Auto balance control Enabled/Disabled selection
8	105	0	Auto balance control start output setting
9	106	0	Auto balance control release range setting
10	107	0	Number of communication management module setting
11	108	0	Non-volatile IC memory save selection
12	109	0	Not used
13	110	0	Not used
14	111	0	Not used
15	112	0	Not used

(7) Control module power OFF → ON

Turn the control module power off and then on. The set value becomes effective.

This completes the specification setting.

If multiple control modules are connected, connect the USB communication cable to the next control module.

Select the connected module number (Example: Module 2) and click the [System] tab.

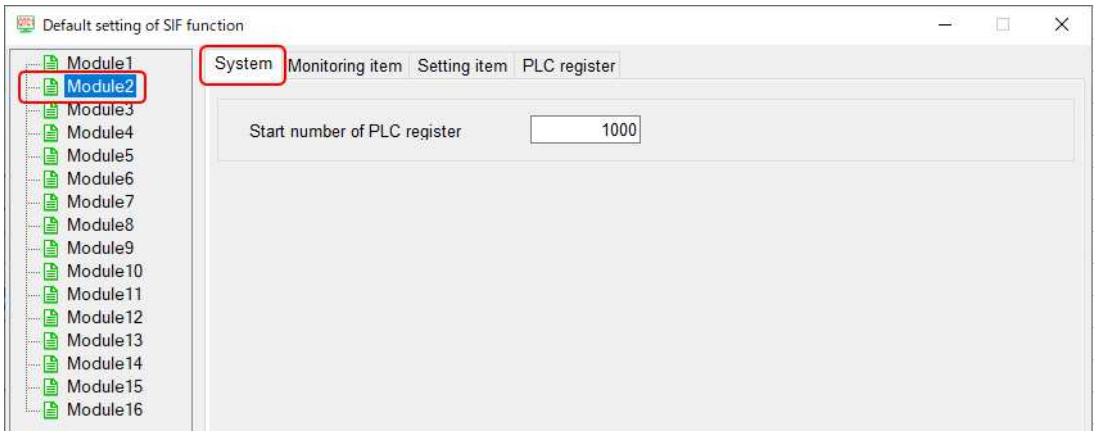

(Fig. 13.6.3-2)

(2) PLC register start number, (5) Monitor item 1 to 3 and (6) Setting item 1 to 7 are selected, and (7) Control module power is turned OFF → ON.

13.7 Operation

The following explains how to connect two control modules to the PLC.

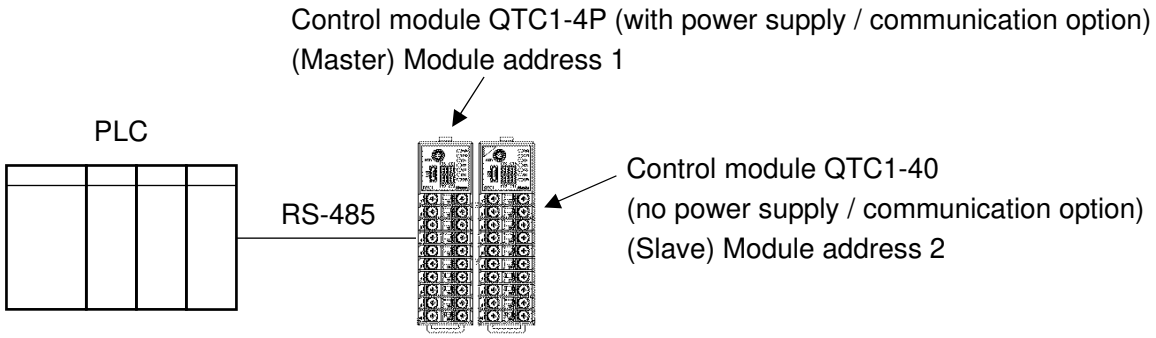

(Fig. 13.7-1)

13.7.1 Communication Procedure

(1) The control module QTC1-4P becomes the master and collects the valid monitor items and setting items of the control module QTC1-40 (slave).

(2) After the PLC communication start waiting time has elapsed, the control module QTC1-4P periodically writes the item selected in the monitor items to the PLC register.
Also, the item selected from the setting items is read from the PLC register in response to a setting request.

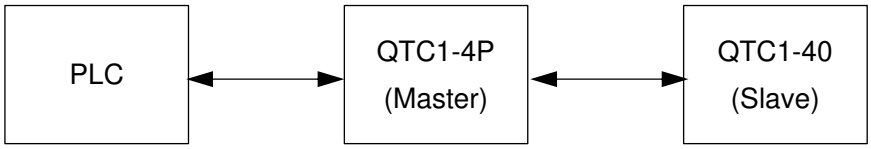

All items

Reading item:
Item selected in Monitor item.
Writing item:
Item selected in Setting item at startup
Items set by the Setting request item number after startup

(Fig. 13.7.1-1)

13.7.2 Handshake between Control Module QTC1-4P and PLC

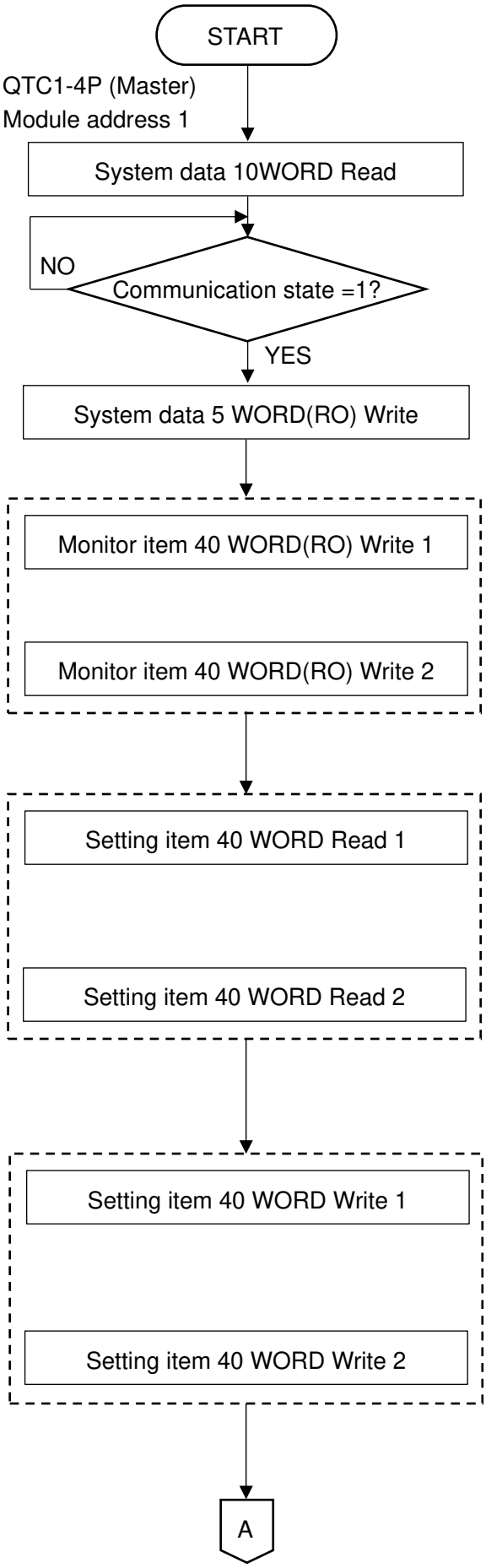

After the PLC communication start wait time has elapsed, the QTC1-4P reads the system data of PLC registers 0 to 9.

When the QTC1-4P completes the data collection, the communication status becomes 1, and communication with the PLC is ready.

QTC1-4P writes system data to PLC registers 0 to 4.

QTC1-4P writes monitor items to PLC registers 10 to 49. However, if it is not selected in the monitor item selection, it will be skipped.

QTC1-4P writes monitor items to PLC registers 50 to 89. However, if it is not selected in the monitor item selection, it will be skipped.

QTC1-4P reads the data of the setting items of PLC registers 90 to 129. However, if the setting request of the setting request command is not set, it is skipped.

QTC1-4P reads the data of the setting items of PLC registers 130 to 169. However, if the setting request of the setting request command is not set, it is skipped.

QTC1-4P reads the data of the setting items of PLC registers 90 to 129. However, if the monitor request of the setting request command is not set, it is skipped.

QTC1-4P reads the data of the setting items of PLC registers 130 to 169. However, if the monitor request of the setting request command is not set, it is skipped.

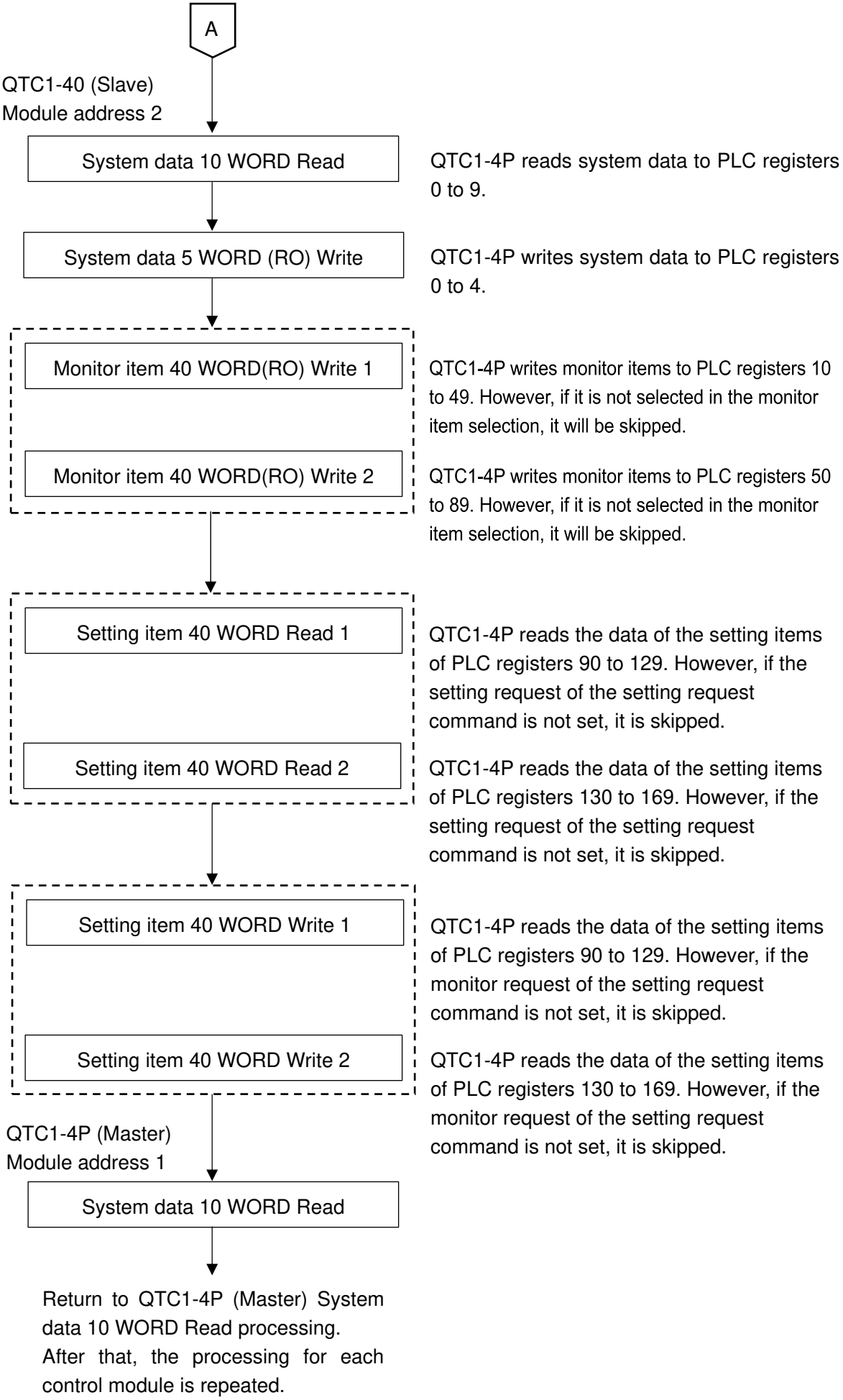
A
QTC1-40 (Slave)
Module address 2
System data 10 WORD Read
QTC1-4P reads system data to PLC registers 0 to 9.
System data 5 WORD (RO) Write
QTC1-4P writes system data to PLC registers 0 to 4.
Monitor item 40 WORD(RO) Write 1
QTC1-4P writes monitor items to PLC registers 10 to 49. However, if it is not selected in the monitor item selection, it will be skipped.
Monitor item 40 WORD(RO) Write 2
QTC1-4P writes monitor items to PLC registers 50 to 89. However, if it is not selected in the monitor item selection, it will be skipped.
Setting item 40 WORD Read 1
QTC1-4P reads the data of the setting items of PLC registers 90 to 129. However, if the setting request of the setting request command is not set, it is skipped.
Setting item 40 WORD Read 2
QTC1-4P reads the data of the setting items of PLC registers 130 to 169. However, if the setting request of the setting request command is not set, it is skipped.
Setting item 40 WORD Write 1
QTC1-4P reads the data of the setting items of PLC registers 90 to 129. However, if the monitor request of the setting request command is not set, it is skipped.
Setting item 40 WORD Write 2
QTC1-4P reads the data of the setting items of PLC registers 130 to 169. However, if the monitor request of the setting request command is not set, it is skipped.
QTC1-4P (Master)
Module address 1
System data 10 WORD Read
Return to QTC1-4P (Master) System data 10 WORD Read processing.
After that, the processing for each control module is repeated.

13.7.3 PLC Communication Data Map

Shown below is the PLC communication data map when the initial setting example for PLC communication is set.

Example of initial setting for PLC communication

MODBUS address		Name	QTC1-4P (Master) setting	QTC1-40 (Slave) setting
HEX	DEC			
0384	900	PLC register start number	1000	1100
0385	901	PLC response wait time	200	200
0386	902	PLC communication start wait time	5	5
0387	903	Reservation (Not used)	0	0
0388	904	Reservation (Not used)	0	0
0389	905	Monitor item 1	31	31
038A	906	Monitor item 2	0	0
038B	907	Monitor item 3	0	0
038C	908	Reservation (Not used)	0	0
038D	909	Reservation (Not used)	0	0
038E	910	Setting item 1	57827	57827
038F	911	Setting item 2	2721	2721
0390	912	Setting item 3	0	0
0391	913	Setting item 4	0	0
0392	914	Setting item 5	0	0
0393	915	Setting item 6	0	0
0394	916	Setting item 7	0	0

PLC data register layout

	QTC1-4P (Master)	QTC1-40 (Slave)
Information between QTC1-4 and PLC (system data)	1000 to 1009	1100 to 1109
Monitor item	1010 to 1029	1110 to 1129
Setting item	1030 to 1085	1130 to 1185

Details of information (system data) between control module QTC1-4 and PLC

Control module QTC1-4 (Master)

Data	PLC data register	Attribute	Description
Communication status	1000	RO	0: QTC1-4P collecting data 1: QTC1-4P completes data collection (Startup: Initial setting value of each slave)
QTC1-4 - PLC Normal communication monitor	1001	RO	Increment counter Repeat 0 to 65535 → 0 to 65535
QTC1-4 Error code	1002	RO	B0: PLC register R/W error 0: Normal 1: Error B1: QTC1-4P communication error 0: Normal 1: Error B2: QTC1-4P Negative acknowledgement when setting0: 0: Normal 1: Error (It will be cleared when B0 of 1006 is cleared.)
Setting request monitor	1003	RO	B0: Setting (Reflect and set to B0 of 1006.) B1: Monitoring (Reflect and set until B1 of 1006 is cleared.)
Reservation	1004	RO	
Setting request item number	1005	R/W	0: All items selected in setting items 1 to 7 1 to 112: Items selected in setting items 1 to 7 (1 data) Only the data (1 data) of the selected item will be read or written. However, because communication with the PLC is a batch process, all the selected items are read or written.
Setting request command (*)	1006	R/W	B0: Setting request (PLC → QTC1-4P) QTC1-4P requests to read the setting item data from the PLC register. B1: Monitor request (QTC1-4P → PLC) QTC1-4P requests to write the setting item data to the PLC register. After the setting request or monitor request is completed, QTC1-4P clears each bit.
Reservation	1007	R/W	
Reservation	1008	R/W	
Reservation	1009	R/W	

(*): If the setting request and the monitor request are set at the same time, processing is performed in the following procedure: ① setting request (QTC1-4P reads PLC register data), ② monitor request (writing data to PLC register).
If the setting request is set during the monitor request, the monitor request is discarded and the monitoring request is made again after the setting request.

Control module QTC1-40 (Slave)

Data	PLC data register	Attribute	Description
Communication status	1100	RO	0: QTC1-4P collecting data of QTC1-40 1: QTC1-4P completes data collection of QTC1-40 (Startup: Initial setting value of each slave)
QTC1-4 - PLC Normal communication monitor	1101	RO	Increment counter Repeat 0 to 65535 → 0 to 65535
QTC1-4 Error code	1102	RO	B0: PLC register R/W error 0: Normal 1: Error B1: Communication error between QTC1-4P and QTC1-40 0: Normal 1: Error B2: Negative acknowledgement when setting QTC1-4P to QTC1-40 (It will be cleared when B0 of 1006 is cleared.) 0: Normal 1: Error
Setting request monitor	1103	RO	B0: Setting (Reflect and set to B0 of 1006.) B1: Monitoring (Reflect and set until B1 of 1006 is cleared.)
Reservation	1104	RO	
Setting request item number	1105	R/W	0: All items selected in setting items 1 to 7 1 to 112: Items selected in setting items 1 to 7 (1 data) Only the data (1 data) of the selected item will be read or written. However, because communication with the PLC is a batch process, all the selected items are read or written.
Setting request command (*)	1106	R/W	B0: Setting request (PLC → QTC1-4P) QTC1-4P requests to read the setting item data from the PLC register. B1: Monitor request (QTC1-4P → PLC) QTC1-4P requests to write the setting item data to the PLC register. After the setting request or monitor request is completed, QTC1-4P clears each bit.
Reservation	1107	R/W	
Reservation	1108	R/W	
Reservation	1109	R/W	

(*): If the setting request and the monitor request are set at the same time, processing is performed in the following procedure: ① setting request (QTC1-4P reads PLC register data), ② monitor request (writing data to PLC register).
If the setting request is set during the monitor request, the monitor request is discarded and the monitoring request is made again after the setting request.

Details of monitor item and setting item between control module QTC1-4 and PLC

Control module QTC1-4P (Master)

Data item	Channel	PLC data register	Attribute	Data
PV reading (Including difference)	CH1 CH2 CH3 CH4	1010 1011 1012 1013	RO	The value of “14.2.1 Control range (14-6)”. Supports input math function (difference input, addition input) and input difference detection function.
MV reading	CH1 CH2 CH3 CH4	1014 1015 1016 1017	RO	Output low limit to Output high limit
SV reading	CH1 CH2 CH3 CH4	1018 1019 1020 1021	RO	Scaling low limit to Scaling high limit

Data item	Channel	PLC data register	Attribute	Data
Status flag 1 reading	CH1 CH2 CH3 CH4	1022 1023 1024 1025	RO	B0: Control Allowed/Prohibited 0: Prohibited 1: Allowed B1: AT Perform/Cancel 0: Cancel 1: Perform B2: Auto/Manual control 0: Automatic 1: Manual B3: Control output 0: OFF 1: ON B4: Input error (Overscale) 0: Normal 1: Error B5: Input error (Underscale) 0: Normal 1: Error B6: Alarm 1 output 0: OFF 1: ON B7: Alarm 2 output 0: OFF 1: ON B8: Alarm 3 output 0: OFF 1: ON B9: Alarm 4 output 0: OFF 1: ON B10: Loop brake alarm output 0: OFF 1: ON B11: Heater burnout alarm output 0: OFF 1: ON B12: Input difference 0: Within range 1: Out of range B13: Undefined B14: Power supply identification 0: 24 V DC 1: USB bus power B15: Non-volatile IC memory error 0: Normal 1: Error

Data item	Channel	PLC data register	Attribute	Data
Status flag 2 reading	CH1 CH2 CH3 CH4	1026 1027 1028 1029	RO	B0: Auto balance control 0: None 1: During auto balance control B1: Undefined B2: Undefined B3: Undefined B4: Cold junction error 0: Normal 1: Error B5: Sensor error 0: Normal 1: Error B6: ADC error 0: Normal 1: Error B7: Host setting value change flag 0: Without flag 1: With flag B8: USB setting value change flag 0: Without flag 1: With flag B9: Undefined B10: Undefined B11: Undefined B12 to B15: **System bit for internal processing. Do not use.**
Control Allowed/Prohibited selection	CH1 CH2 CH3 CH4	1030 1031 1032 1033	R/W	0: Prohibited 1: Allowed
AT Perform/Cancel selection	CH1 CH2 CH3 CH4	1034 1035 1036 1037	R/W	0: AT Cancel 1: AT Perform
SV setting	CH1 CH2 CH3 CH4	1038 1039 1040 1041	R/W	Scaling low limit to Scaling high limit
Proportional band setting	CH1 CH2 CH3 CH4	1042 1043 1044 1045	R/W	1 to Input span °C (°F) or 0.1 to Input span °C (°F) when DC current and DC voltage input 0.10 to 100.00 %
Integration time setting	CH1 CH2 CH3 CH4	1046 1047 1048 1049	R/W	0 to 3600 seconds or 0.0 to 2000.0 seconds when "2: Slow-PID control" is selected in control action selection. 1 to 3600 seconds or 0.1 to 2000.0 seconds
Derivative time setting	CH1 CH2 CH3 CH4	1050 1051 1052 1053	R/W	0 to 3600 seconds or 0.0 to 2000.0 seconds

Data item	Channel	PLC data register	Attribute	Data
Alarm 1 action selection	CH1 CH2 CH3 CH4	1054 1055 1056 1057	R/W	0: No action 1: High limit alarm 2: Lowh limit alarm 3: High/Low limits alarm 4: High/Low limit s range 5: Process High alarm 6: Process low alarm 7: High limit with standby 8: Low limit with standby 9: High/Low limits alarm with 10: High/Low limits alarm individually 11: High/Low limit s range alarm individually 12: High/Low limits alarm with standby individually
Alarm 2 action selection	CH1 CH2 CH3 CH4	1058 1059 1060 1061	R/W	
Alarm 3 action selection	CH1 CH2 CH3 CH4	1062 1063 1064 1065	R/W	
Alarm 4 action selection	CH1 CH2 CH3 CH4	1066 1067 1068 1069	R/W	
Alarm 1 value setting	CH1 CH2 CH3 CH4	1070 1071 1072 1073	R/W	Refer to “Alarm 1 to 4 value setting range table”.
Alarm 2 value setting	CH1 CH2 CH3 CH4	1074 1075 1076 1077	R/W	
Alarm 3 value setting	CH1 CH2 CH3 CH4	1078 1079 1080 1081	R/W	
Alarm 4 value setting	CH1 CH2 CH3 CH4	1082 1083 1084 1085	R/W	

Alarm 1 to 4 value setting range table

Alarm type	Setting range
No action	
High limit alarm	-(Input span) to Input span (*1)
Lowh limit alarm	-(Input span) to Input span (*1)
High/Low limits alarm	0 to Input span (*1)
High/Low limit s range	0 to Input span (*1)
Process High alarm	Input range lower limit to Input range high limit (*2)
Process low alarm	Input range lower limit to Input range high limit (*2)
High limit with standby	-(Input span) to Input span (*1)
Low limit with standby	-(Input span) to Input span (*1)
High/Low limits alarm with	0 to Input span (*1)
High/Low limits alarm individually	0 to Input span (*1)
High/Low limit s range alarm individually	0 to Input span (*1)
High/Low limits alarm with standby individually	0 to Input span (*1)

(*1): When DC current input and DC voltage input, the input span is the scaling width.

(*2): When DC current input and DC voltage input, the Input range lower limit is the scaling lower limit, and the Input range high limit is the scaling high limit.

Control module QTC1-40 (Slave)

Data item	Channel	PLC data register	Attribute	Data
PV reading (Including difference)	CH1 CH2 CH3 CH4	1110 1111 1112 1113	RO	Same as QTC1-4P (Master).
MV reading	CH1 CH2 CH3 CH4	1114 1115 1116 1117	RO	Same as QTC1-4P (Master).
SV reading	CH1 CH2 CH3 CH4	1118 1119 1120 1121	RO	Same as QTC1-4P (Master).
Status flag 1 reading	CH1 CH2 CH3 CH4	1122 1123 1124 1125	RO	Same as QTC1-4P (Master).
Status flag 2 reading	CH1 CH2 CH3 CH4	1126 1127 1128 1129	RO	Same as QTC1-4P (Master).
Control Allowed/Prohibited selection	CH1 CH2 CH3 CH4	1130 1131 1132 1133	R/W	Same as QTC1-4P (Master).
AT Perform/Cancel selection	CH1 CH2 CH3 CH4	1134 1135 1136 1137	R/W	Same as QTC1-4P (Master).
SV setting	CH1 CH2 CH3 CH4	1138 1139 1140 1141	R/W	Same as QTC1-4P (Master).
Proportional band setting	CH1 CH2 CH3 CH4	1142 1143 1144 1145	R/W	Same as QTC1-4P (Master).
Integration time setting	CH1 CH2 CH3 CH4	1146 1147 1148 1149	R/W	Same as QTC1-4P (Master).
Derivative time setting	CH1 CH2 CH3 CH4	1150 1151 1152 1153	R/W	Same as QTC1-4P (Master).

Data item	Channel	PLC data register	Attribute	Data
Alarm 1 action selection	CH1 CH2 CH3 CH4	1154 1155 1156 1157	R/W	Same as QTC1-4P (Master).
Alarm 2 action selection	CH1 CH2 CH3 CH4	1158 1159 1160 1161	R/W	
Alarm 3 action selection	CH1 CH2 CH3 CH4	1162 1163 1164 1165	R/W	
Alarm 4 action selection	CH1 CH2 CH3 CH4	1166 1167 1168 1169	R/W	
Alarm 1 value setting	CH1 CH2 CH3 CH4	1170 1171 1172 1173	R/W	Same as QTC1-4P (Master).
Alarm 2 value setting	CH1 CH2 CH3 CH4	1174 1175 1176 1177	R/W	
Alarm 3 value setting	CH1 CH2 CH3 CH4	1178 1179 1180 1181	R/W	
Alarm 4 value setting	CH1 CH2 CH3 CH4	1182 1183 1184 1185	R/W	

13.7.4 Data Exchange between Control Module QTC1-4 and P-PLC

Data transfer between the control module QTC1-4P and PLC is performed by the setting request item number and setting request command.

(1) Setting request item number

Set whether to transfer the data of all items selected in setting item 1 to 7 selection or only the data (1 data) of the selected item.

0: Transfers the data of all items selected in setting item 1 to 7 selection.

1 to 112: Transfers only the data (1 data) of the item selected in setting item 1 to 7 selection.

(2) Setting request command

The setting request command includes setting request and monitor request.

B0: Setting request (PLC → QTC1-4P)

The control module QTC1-4P is a command to request to read the data of the setting item of the PLC register.

B1: Monitor request (QTC1-4P → PLC)

The control module QTC1-4P is a command to request to write the data of the setting item of the PLC register.

If setting request and monitor request are set at the same time, processing is performed in the order of setting request (QTC1-4P reads the data of the setting item in the PLC register) and then monitor request (writing the data of the setting item in the PLC register).

If a setting request is set during monitor request, the monitor request is discarded and the monitor request is made again after the setting request.

13.7.5 Data Settings

⚠ Caution

When setting data, first write all the setting item data to the PLC register.
Note that if you change the setting items of the control module QTC1-4P without writing all the setting item data, it may be overwritten with an undefined value and malfunction may occur.

Data setting procedure

When select the control allowed in control allowed/prohibited selection of the control module QTC1-4P

(1) Set 0 to the setting request item number
To write all the setting item data to the PLC register, set 0 to 1005 (setting request item number).

(2) Set B1 (monitor request) of the setting request command
Set 1 (decimal number: 2) to B1 (monitor request) of 1006 (setting request command).
The control module QTC1-4P starts writing the setting item data to the PLC register.

(3) Check B1 (monitor request) of the setting request command
When the writing of the setting item data to the PLC register is completed, B1 (monitor request) of 1006 (setting request command) is cleared.

(4) Set data
Set 1 (control allowed) to 1030 to 1033 (control allowed/prohibited selection) of the PLC register.

(5) Set 1 to the setting request item number
To read the control allowed/prohibited selection data of the PLC register, set 1 to 1005 (setting request item number).

(6) Set B0 (setting request) of the setting request command
Set 0 (decimal number: 1) to B0 (monitor request) of 1006 (setting request command).
The control module QTC1-4P starts reading the setting item data of the PLC register.

(7) Check B0 (monitor request) of the setting request command
When the reading of the setting item data to the PLC register is completed, B0 (monitor request) of 1006 (setting request command) is cleared.

14 Action Explanation

14.1 Control Action Explanation

With the control action selection, any control type can be selected from 2 DOF PID control, Fast-PID control, Slow-PID control, ON-OFF control, or Gap-PID control.

The control action selection can be selected only when control prohibited.

When the integration time is set to 0 or 0.0, Slow-PID control cannot be selected.

Optimum control is possible by selecting the control type according to the intended use and process.

The factory default settings of the control parameters when switching the control type are shown below.

Control type / Control parameter	2 DOF PID control	Fast-PID control	Slow-PID control	ON-OFF control	Gap-PID control
Proportional band	No update	No update	No update	No update	No update
Integral time	No update	No update	No update	No update	No update
Derivative time	No update	No update	No update	No update	0
Proportional gain 2 DOF coefficient (α) (*1)	0.40	1.00	1.00	1.00	1.00
Integral 2 DOF coefficient (β) (*1)	1.35	1.00	1.00	1.00	1.00
Derivative 2 DOF coefficient (γ, Cd) (*2)	0.00	0.00	0.00	0.00	1.00
SV proportional coefficient (Cp) (*2)	1.00	1.00	0.00	1.00	1.00

(*1): Do not change anything other than 2 DOF PID control.

(*2): Do not change.

Rising characteristics / Disturbance characteristics

The rising and disturbance characteristics of 2 DOF PID control, Fast-PID control, and Slow-PID control are shown below.

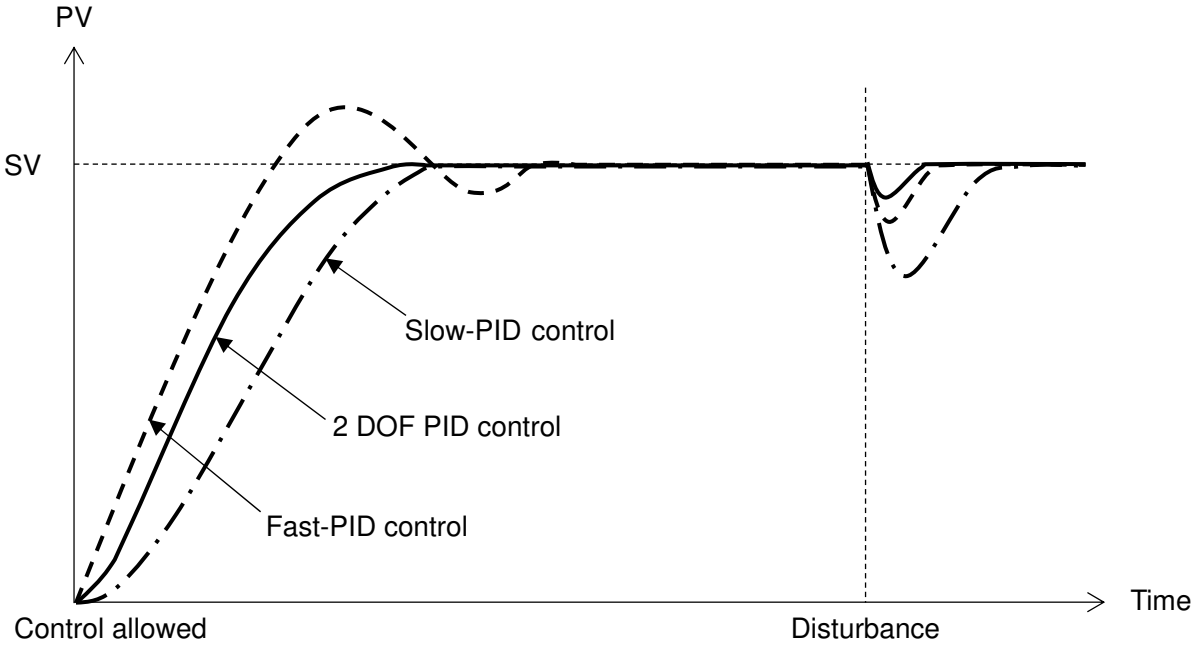

(Fig. 14.1-1)

Target value tracking / Disturbance suppression

The characteristic maps for target value tracking and disturbance suppression of 2 DOF PID control, Fast-PID control, and Slow-PID control are shown below.

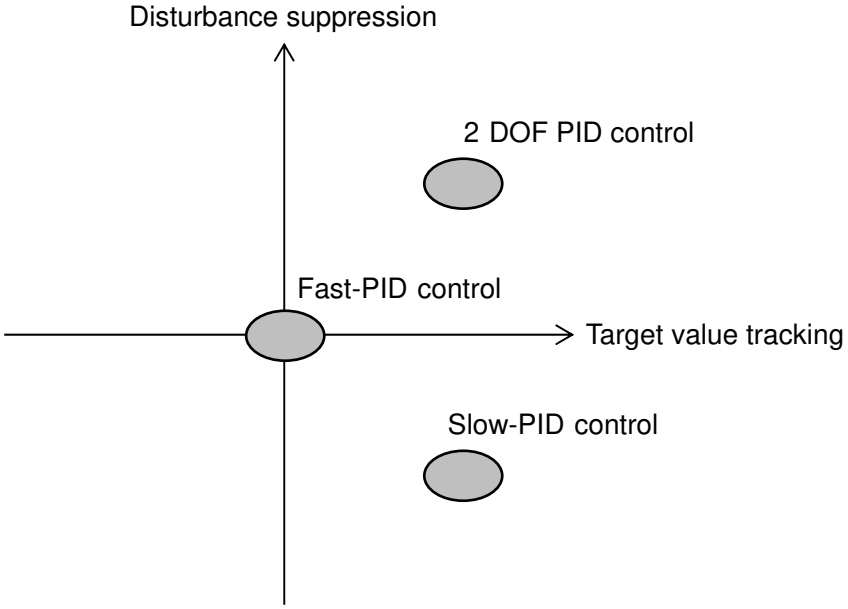

(Fig. 14.1-2)

The number of main control parameters used in control type is shown below.

Control type	Main control parameter
2 DOF PID control	6 [Proportional band, Integral time, Derivative time, Proportional gain 2 DOF coefficient (α), Integral 2 DOF coefficient (β), Proportional cycle]
Fast-PID control	4 [Proportional band, Integral time, Derivative time, Proportional cycle]
Slow-PID control	4 [Proportional band, Integral time, Derivative time, Proportional cycle]
ON-OFF control	1 [ON/OFF hysteresis]
Gap-PID control	6 [Proportional band, Integral time, Derivative time, Proportional cycle, Gap width, Gap coefficient]

14.1.1 2 DOF PID Control

The 2 DOF PID control is control type that achieves both “following characteristics when SV is changed” and “disturbance suppression”.

The 2 DOF means that the above two characteristics can be adjusted independently.

“Following characteristics when SV is changed” is adjusted by proportional gain 2 degrees of freedom coefficient (α) and integral 2 degrees of freedom coefficient (β), and “disturbance suppression” is adjusted by proportional band, integral time and derivative time.

The table below shows the relationship between response speed, overshoot/undershoot, and steady state arrival time depending on the settings of Proportional gain 2 DOF coefficient (α) and Integral 2 DOF coefficient (β).

	When Proportional gain 2 DOF coefficient (α) is increased	When Integral 2 DOF coefficient (β) is increased
Response speed	Become fast	
Overshoot / Undershoot	Become large	Become small
Steady state arrival time		Become slow

The Proportional gain 2 DOF coefficient (α) and the Integral 2 DOF coefficient (β) have set up the optimal value as a factory default value in the usual control.

14.1.2 Fast-PID Control

The Fast-PID control is a general control type for fixed value control.

14.1.3 Slow-PID Control

The Slow-PID control is a control type that is effective for processes that do not want to generate overshoot or for processes in which PV does not easily drop once PV exceeds SV.

14.1.4 ON-OFF Control

The control output is turned on when PV is lower than SV, and the control output is turned off when PV exceeds SV.

Overshoot, undershoot, and hunting will occur.

The ON-OFF control is suitable for processes that do not require accuracy.

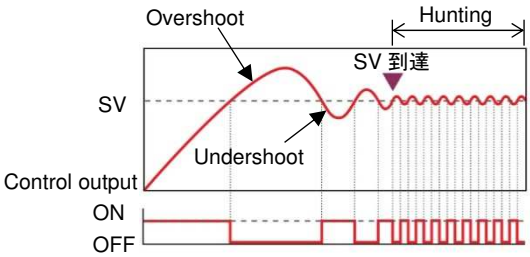

(Fig. 14.1.4-1)

Overshoot / Undershoot

As shown in (Fig. 14.1.4-1), if the temperature of the controlled object rises, it may exceed SV significantly. This is called overshoot.

Also, lowering the temperature from the SV is called undershoot.

Hunting

As shown in (Fig. 14.1.4-1), it means the state when the control result becomes oscillatory.

14.1.5 Gap-PID Control

If the PV is noisy or the operating part has hysteresis, a slight fluctuation may continue near the deviation of zero. In such a case, the dead zone is usually used, but since control is not performed within the dead zone, PV changes during a disturbance.

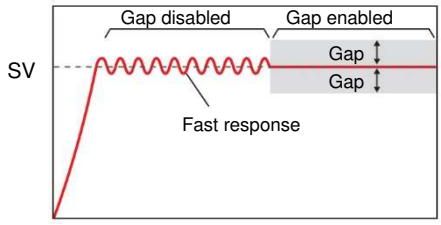

(Fig. 14.1.5-1)

It is suitable for fast response processes such as flow rate and valves.

14.1.6 PID Control Parameters

P control, PI control, PD control or deviation PID control can be performed by setting the PID control parameter.

(1) P control

When the integral time and derivative time are set to 0, P control is performed.
P control is a control operation that outputs a manipulated variable proportional to the deviation between SV and PV within the proportional band.

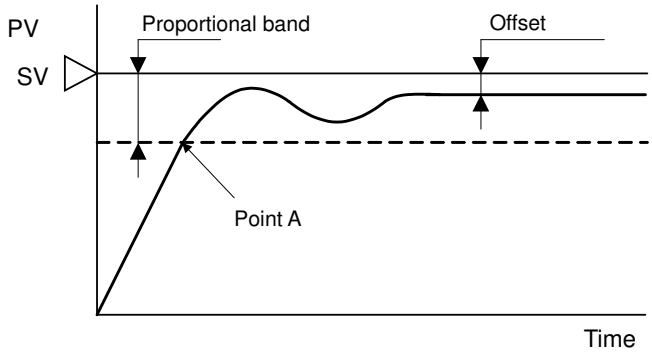

(Fig. 14.1.6-1)

Control output is ON until PV reaches point A. When it exceeds this (when it enters the proportional band), the control output starts to turn ON/OFF in the proportional cycle, and when it exceeds SV, the control output turns OFF.

As the temperature rises from point A to SV, the control output ON time becomes shorter and the OFF time becomes longer. Compared to ON-OFF control, overshoot is eliminated and hunting is reduced, but offset occurs.
P control is suitable for processes with no dead time such as gas pressure control and level control.

- When the proportional band is reduced, the control output turns ON/OFF from around SV, so the time until the PV temperature rises to SV becomes shorter and the offset becomes smaller, but hunting becomes larger.
  If the proportional band is made extremely small, the control will be similar to the ON-OFF control.
- When the proportional band is increased, the control output turns ON/OFF from a temperature considerably lower than SV, so overshoot and hunting are reduced, but it takes time for PV to rise to SV, and also for SV and PV. The offset will also increase.

(2) PI control

When the derivative time is set to 0, PI control is performed.

In PI control, the offset generated by P control is automatically corrected by the integral action, and temperature control is performed with SV. However, it takes time for the temperature to stabilize even if the temperature changes rapidly due to disturbance.

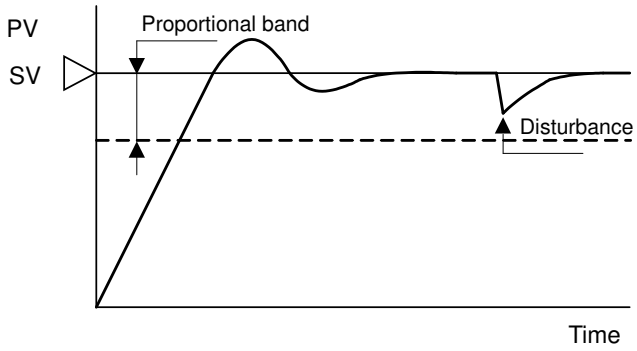

(Fig. 14.1.6-2)

PI control is suitable for temperature control, which changes slowly.

- If the integral time is too short, the integral action will be strong and the offset can be corrected in a short time, but this may cause hunting with a long cycle.
- If the integral time is too long, the integral action will be weak and it will take time to correct the offset.

(3) PD control

When the integral time is set to 0, PD control is performed.

Compared to P control, PD control has a quicker response to rapid temperature changes due to disturbances, stabilizes control in a short time, and improves transient response characteristics.

PD control is suitable for temperature control with fast changing speed.

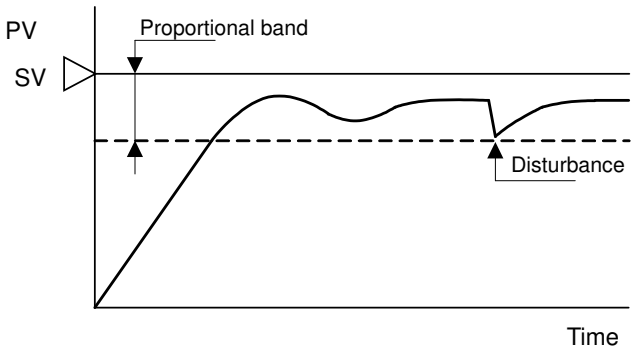

(Fig. 14.1.6-3)

- Decreasing the derivative time weakens the derivative action and delays the response to rapid temperature changes. Also, since the function of suppressing a rapid temperature rise is weakened, the temperature rise time up to SV is shortened, but overshooting tends to occur correspondingly.
- Increasing the derivative time strengthens the derivative action, resulting in faster response to rapid temperature changes. Also, since the function of suppressing a sudden temperature rise becomes stronger, the temperature rise time to SV becomes slower, but overshooting is less likely to occur.

(4) Deviation PID control

> ⚠ **Caution**
>
> The proportional gain 2 DOF coefficient (α) and the derivative 2 DOF coefficient (γ, Cd) must be set only when using deviation PID control.
> For other controls, do not change The proportional gain 2 DOF coefficient (α) and the derivative 2 DOF coefficient (γ, Cd).

When the Fast-PID control is selected in the control action selection and the proportional gain 2 DOF coefficient (α) is set to 1.00 and the derivative 2 DOF coefficient (γ) is set to 1.00, the deviation PID control is performed.
The feature of deviation PID control is that only the response after SV change is fast.

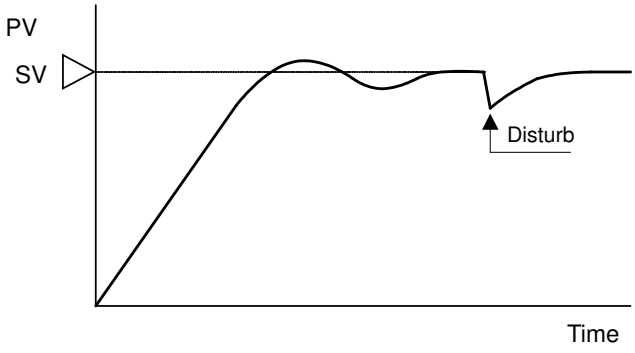

(Fig. 14.1.6-4)

It is suitable for program control and cascade control using the SV rise rate and SV fall rate.
It is not suitable for processes that cannot accept sudden changes in MV.

14.2 Standard Function

14.2.1 Control Range

If the control range below is exceeded, the control output will turn OFF.

Control range for thermocouple input (no decimal point)

Input range low limit - 50 °C (90°F) to Input range high limit + 50 °C (90°F)

Control range for thermocouple input (with decimal point) and RTD input

Input range low limit - (Input span × 1 %) °C (°F) to Input range high limit + 50.0 °C (90°F)

Control range for DC current input and DC voltage input

Scaling low limit - Scaling width × 1 % to Scaling high limit + Scaling width × 10 %

14.2.2 Integral/Differential Decimal Point Position

Select whether the integral time or the derivative time has no decimal point or has a decimal point.
When there is no decimal point and there is a decimal point, it is automatically converted to a value 0.1 times the current set value.
Also, when the decimal point is changed to the one without a decimal point, the value is automatically converted to 10 times the current set value.
If the setting goes out of the setting range by changing the position of the decimal point, it becomes the setting range upper limit value or lower limit value.

14.2.3 MV Bias

When performing control, an offset may occur without reaching SV.
In such a case, it is a function that can be added to MV.

14.2.4 Output Minimum ON/OFF Time

When the MV is other than 0% or 100%, the output can be turned ON or OFF without depending on the MV by setting the output minimum ON/OFF time. However, when the auto balance control function is selected, it becomes invalid.

When output is ON

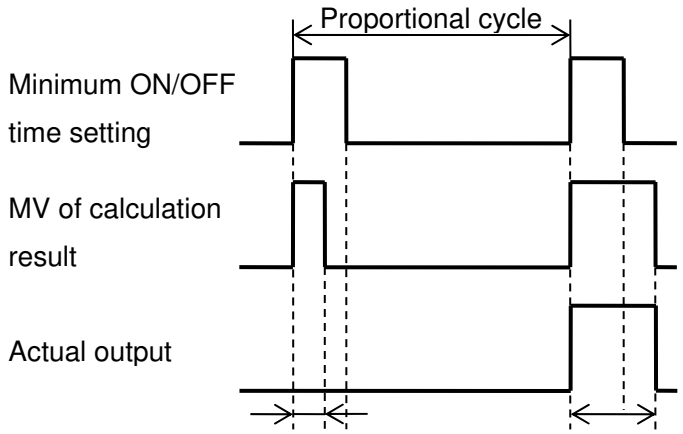

Output OFF when the MV ON time of the calculation result is shorter than the minimum ON/OFF time.

Output ON at the calculation result MV when the ON time of the operation result MV is longer than the minimum ON/OFF time.

(Fig. 14.2.4-1)

When output is OFF

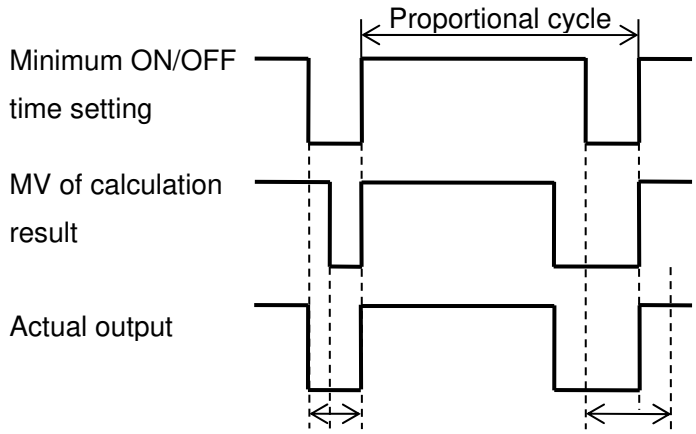

Output is turned OFF at the minimum ON/OFF time when the calculated MV OFF time is shorter than the minimum ON/OFF time.

Output of the calculated result MV is OFF when the calculated result MV OFF time is longer than the minimum ON/OFF time.

(Fig. 14.2.4-2)

14.2.5 Alarm Output

For Alarm output, the alarm value is set by ± deviation from the SV (excluding Process alarm), and if the input goes outside the range, the Alarm output is turned ON (turned OFF for High/Low limit range alarm).

Select High limit alarm, Lowh limit alarm, High/Low limits alarm, High/Low limit s range alarm, Process High alarm, Process Low alarm, High limit with standby alarm, Low limit with standby alarm, High/Low limits alarm with standby alarm, High/Low limits alarm individually, High/Low limit s range alarm individually, High/Low limits alarm with standby individually or No action.

Refer to “14.5.3 Alarm Operation Diagram (14-31)” for detail of alarm action.

Alarm value 0 Enable/Disable selection

When the alarm value is 0, select whether to enable or disable the alarm value.

If select enabled, set the alarm value to 0 in High limit alarm, Lowh limit alarm, High/Low limits alarm, High/Low limit s range alarm, High limit with standby alarm, Low limit with standby alarm, High/Low limits alarm with standby alarm, High/Low limits alarm individually, High/Low limits range alarm individually and High/Low limits alarm with standby individually to activate the alarm action.

14.2.6 Loop Break Alarm

Detects actuator trouble (heater burnout, sensor burnout).

When control action is Reverse action

When the PV does not rise above the loop break alarm action width setting within the loop break alarm time, even if MV reaches 100% or the output high limit, the loop break alarm is activated.

When the PV does not fall above the loop break alarm action width setting within the loop break alarm time, even if MV reaches 0% or the output low limit, the loop break alarm is activated.

When control action is Direction action

When the PV does not fall above the loop break alarm action width setting within the loop break alarm time, even if MV reaches 100% or the output high limit, the loop break alarm is activated.

When the PV does not rise above the loop break alarm action width setting within the loop break alarm time, even if MV reaches 0% or the output low limit, the loop break alarm is activated.

14.2.7 Set Value Ramp Functio

When the SV is changed, from before to after the change SV is controlled at the setting change rate.

When the power is turned on, the rate of change from PV to SV at that time is controlled.

If set to 0, this function will not work.

14.2.8 Power On Restore Action

When the power is turned on, select whether to resume in the continuous state (state before turning off the power) or in the stopped state.

14.2.9 Non-volatile IC Memory Data Save

Select whether to allow or prohibit saving data to the non-volatile IC memory.

If you select save prohibition, can temporarily change all the set values, but if turn the power off and then on, it will return to the value before selecting save prohibition.

14.2.10 Auto/Manual Control Switching

Switches between automatic control and manual control.

When switching from automatic control to manual control or from manual control to automatic control, the balanceless bumpless function prevents sudden changes in MV.

MV can be set arbitrarily by switching to manual control.

When the instrument power is turned on, it will be automatically controlled.

14.2.11 Sensor Correction Factor

Set the slope of the sensor input value.

The sensor correction coefficient setting is calculated by the following formula.

Sensor correction coefficient setting = (Y' - X') / (Y - X)

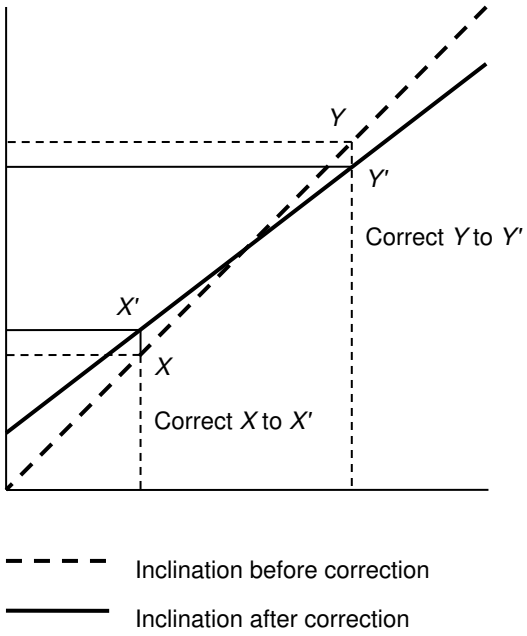

(Fig. 14.2.11-1)

14.2.12 Sensor Correction

If the temperature at the control location and the temperature at the sensor location are different, PV is corrected.

However, it is valid within the input rated range regardless of the sensor correction value.

PV after input correction is expressed by the following formula.

PV after input correction =

Current PV ×Sensor correction coefficient setting value + (Sensor correction setting value)

14.2.13 Output Rate-of-Change Limit

When PV is lower than SV in heat control, the normal output changes from OFF to ON as shown in (Fig. 14.2.13-1), but set the output change rate limit value, the output change rate can be changed as shown in (Fig. 14.2.13-2).

Set the MV that changes for 1 second.

If 0 is set, this function will not work.

It is suitable for controlling high-temperature heaters (components containing molybdenum, tungsten, platinum, etc., used at about 1500 to 1800 °C) that will be cut off when electricity is applied rapidly.

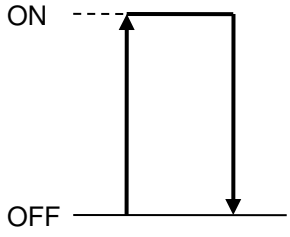

(Fig. 14.2.13-1)

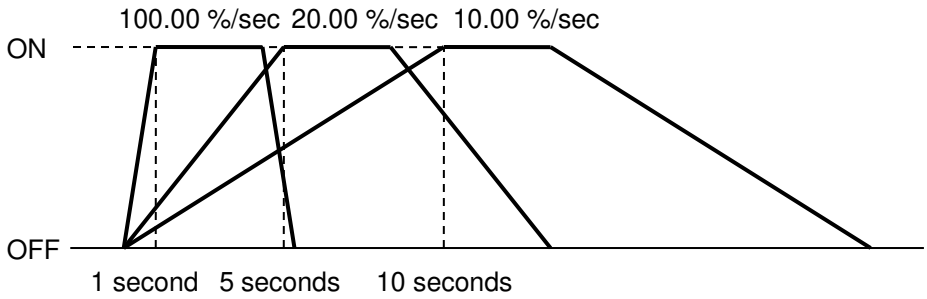

(Fig. 14.2.13-2)

14.2.14 Control Function

Select Standard, Heating/Cooling control, Cascade control or Output selection function, for control function selection.

The control function selection can be selected only when control prohibited.

(1) Heating/Cooling control

The heating/cooling control is a control that is combined with cooling operation when it is difficult to control the temperature control of the controlled object only by heating operation.

The control result calculated according to SV and PV is divided into heating output and cooling output and output.

When PV is larger than SV, cooling output is output.

When PV is smaller than SV, heating output is output.

It is possible to set the band that outputs both heating output and cooling output (overlap), and the band that does not output both (dead band).

Also, the cooling action mode can be selected from Air cooling (Linear characteristics), Oil cooling (1.5th power of the linear characteristic s) or Water cooling (2nd power of the linear characteristic).

The output characteristics are as shown below for cooling MV.

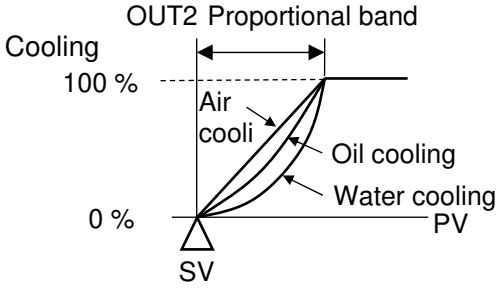

(Fig. 14.2.14-1)

For processes that generate heat (extruders, etc.) and temperature control near room temperature (environmental testers, etc.), heating and cooling control that performs both heating and cooling operations for the controlled object is effective.

When heating/cooling control is selected for CH1 in control function selection, CH1 becomes heating output and CH2 becomes cooling output.

When heating/cooling control is selected for CH3 in control function selection, CH3 becomes heating output and CH4 becomes cooling output.

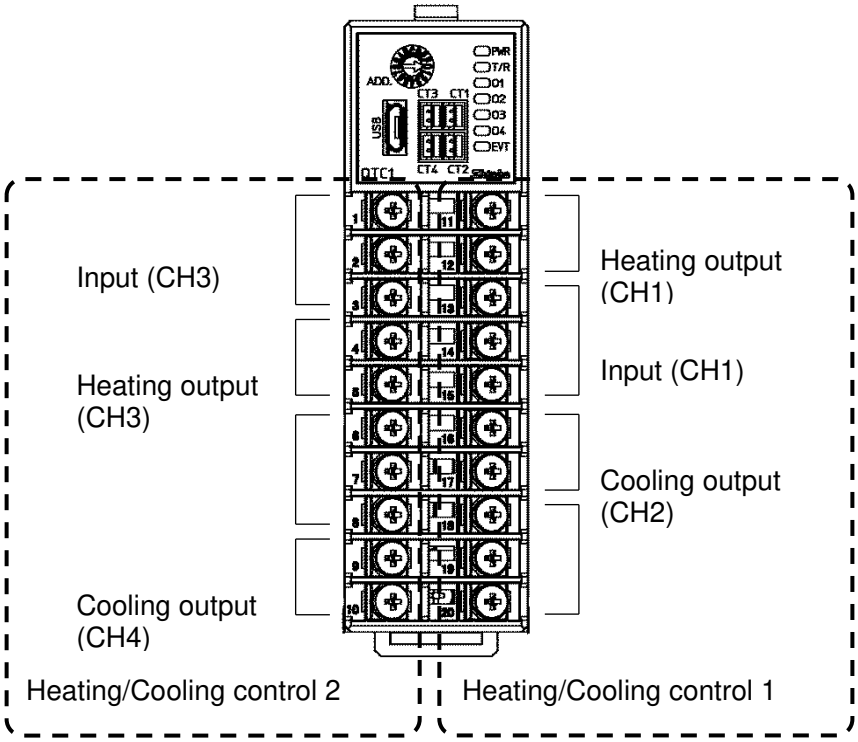

(Fig. 14.2.14-2)

(2) Cascade control

The cascade control is a method of combining two PID controls to form one feedback group and controlling.

This is effective when controlling a control target that has an extremely long delay time or dead time from the change of MV to the measurement of the control target.

Although it takes longer for PV to reach SV, highly stable control is possible.

When the cascade control is selected for CH1 in the control function selection, the cascade control is performed with CH1 as the master and CH2 as the slave.

When the cascade control is selected for CH3 in the control function selection, the cascade control is performed with CH3 as the master and CH4 as the slave.

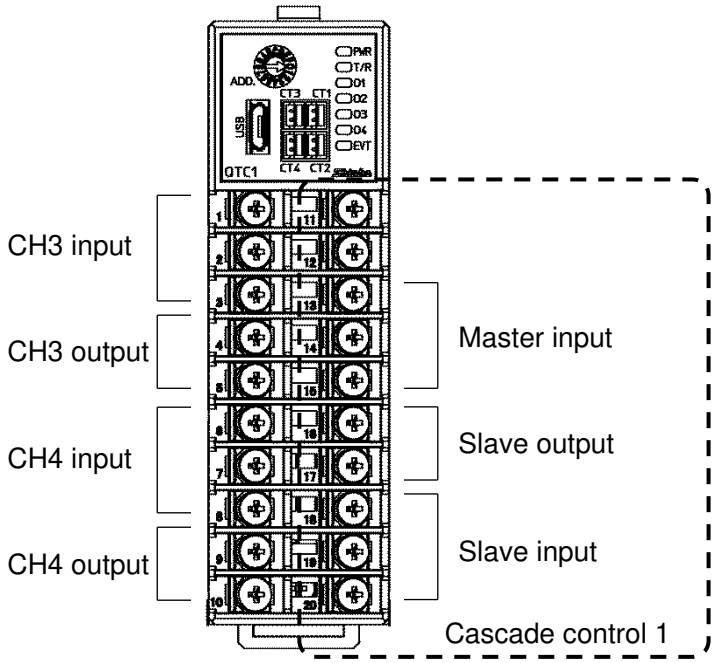

(Fig. 14.2.14-3)

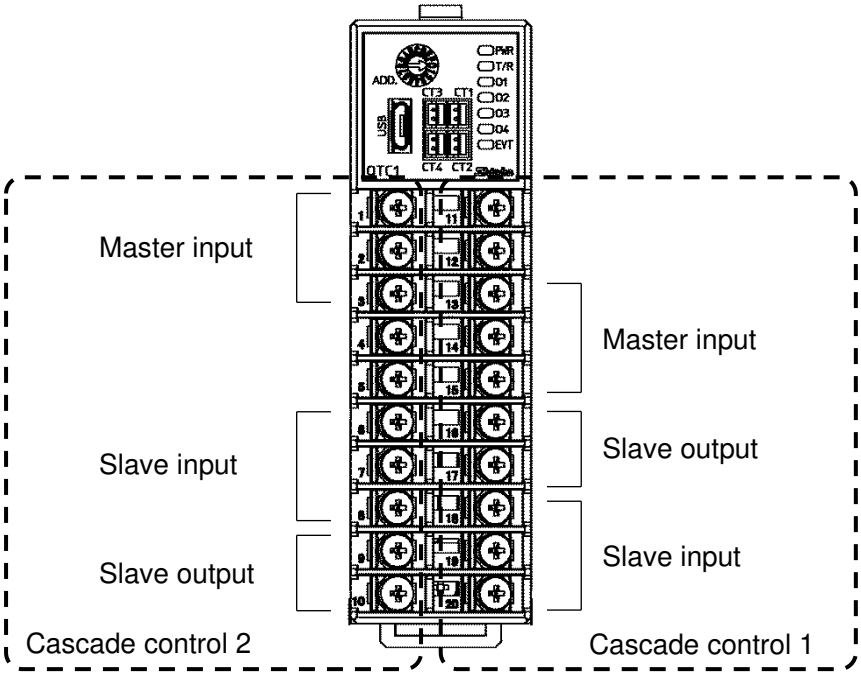

(Fig. 14.2.14-4)

The MV on the master side obtained from the SV on the master side (CH1 or CH3) and PV is substituted for the SV on the slave side (CH2 or CH4), and the slave side performs control calculation and controls on the MV on the slave side.
The control output on the master side is OFF (0 mA for current output).
MV (0 to 100%) on the master side is converted according to the setting of slave scale low limit value to slave scale high limit value, and becomes SV on the slave side.
For example, if the slave scale low limit value is 100 °C and the slave scale high limit value is 400 °C, the master side MV is 0% 100 °C, 50% 200 °C, 100% 400°C is the SV on the slave side.
It is necessary to design the system so that the control on the slave side has less delay than the control on the master side and a quick control response can be obtained.

(Example)

This is an application that selects the cascade control for CH1 in control function selection, uses CH1 as the master and CH2 as the slave, and adjusts the heat quantity of the heater using the power controller to adjust the temperature of the controlled object.

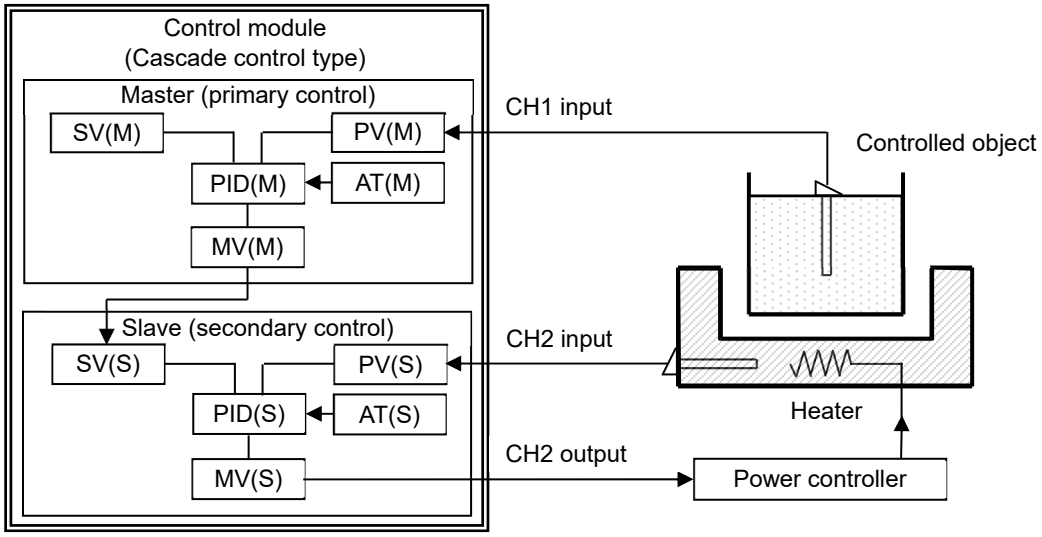

(Fig. 14.2.14-5)

AT for cascade control

Execute AT in cascade control according to the following procedure.

- Slave side (CH2) AT
  ① Set SV (AT point) on slave side (CH2).
  ② Select AT Perform in AT Perform/Cancel on the slave side (CH2).
  After AT is completed, each PID setting value on the slave side (CH2) is automatically set.
- Master side (CH1) AT
  ① Set SV on master side (CH1).
  ② Select AT Perform in AT Perform/Cancel on the master side (CH1).
  After AT is completed, each PID setting value on the master side (CH1) is automatically set.

Depending on the controlled object, the optimum PID settings may not be obtained.
In such a case, refer to each PID setting value after AT is completed and set manually.

(3) Output selection function

If the used channel fails, the input can be changed to an unused channel and the output location for the input can be selected.

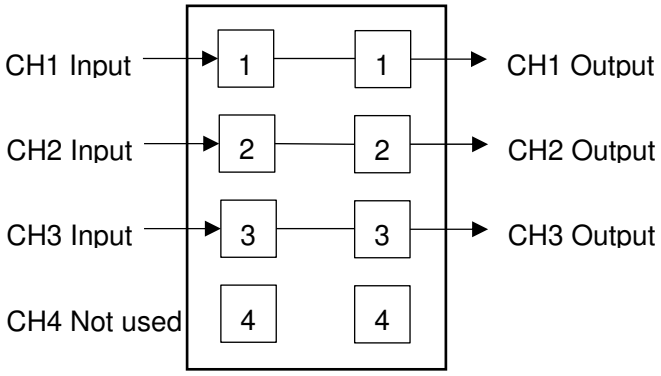

(Fig. 14.2.14-6)

If the input or output fails, you can select the input channel for the output of each channel by selecting the output channel.

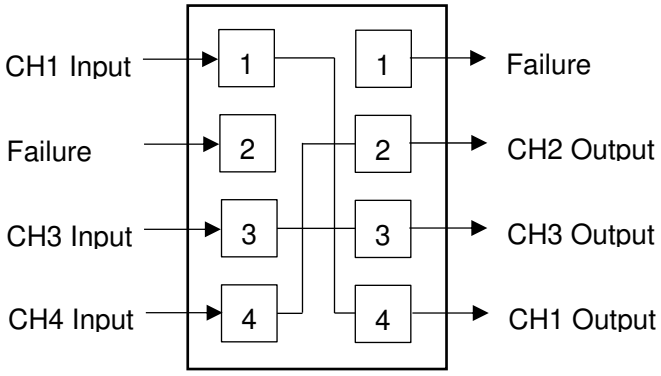

(Fig. 14.2.14-7)

The same output can be output up to 4 points for one input.

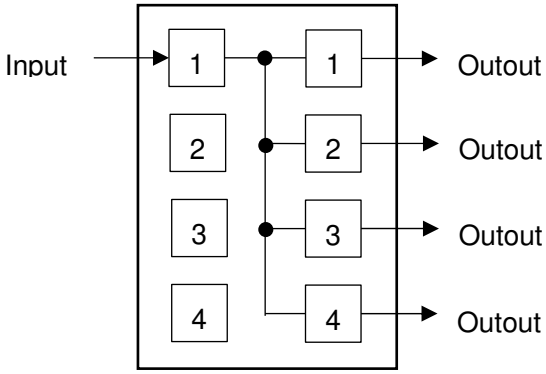

(Fig. 14.2.14-8)

14.3 Extension function

14.3.1 Extension function selection

Select No function in the Extension function selection or from Auto balance control function.

(1) Auto balance control function

This function suppresses partial burning and mechanical strain by performing soaking on one control target at multiple control points.

Setting procedure of auto balance control

Describes the procedure for auto balance control.

① Select Auto balance control function in Extension function selection.
② Select Interlock or Alone in Auto balance control interlock/alone selection.
③ Select Master channel or Slave channel in Auto balance control master/slave selection.
④ Select Enabled or Disabled in Auto balance control Enabled/Disabled selection.
⑤ Set the number of modules managed by the master module in Number of communication management module setting (when Interlock is selected in Auto balance control interlock/alone selection).
⑥ Select Allowed in Control Allowed/Prohibited selection.

Operation explanation of auto balance control

When using the communication expansion module QMC1, QMC1 becomes the master and transfers data between control modules.
When the communication expansion module QMC1 is not used, the control module QTC1-4P (with power supply / communication option) becomes the master, and the master channel and slave channel are selected from the master input channel by auto balance control master/slave selection.
The auto balance control function does not work when the master channel is not selected.

When Enabled is selected for Auto balance control Enabled/Disabled selection, control prohibited is changed to control allowed to start auto balance control.
The slave channels that are allowed to control within 10 seconds from the master channel on which autobalance control was started are the target channels for autobalance control.
Slave channels that have been allowed to control after 10 seconds have passed (during automatic balance control operation) are excluded from normal operation and are controlled normally.
When the auto balance control function operates, the SV of the slave channel heats up according to the PV of the master channel.
If the master channel has an input error, cancel the auto balance control function.
Slave channels that have no input error are individually controlled normally.

The set value ramp function is disabled during auto balance control.
It is also invalid when 2 DOF PID control, Fast-PID control, ON-OFF control or Gap-PID control is selected in control action selection.

When using the auto balance control function, the same input range is used for the inputs that are used for auto balance control.
For DC current input and DC voltage input, set the scaling high limit and scaling low limit to the same setting.

Slave channel SV of auto balance control

Slave channel SV of auto balance control =
Master channel PV + (Slave channel SV - Master channel SV)

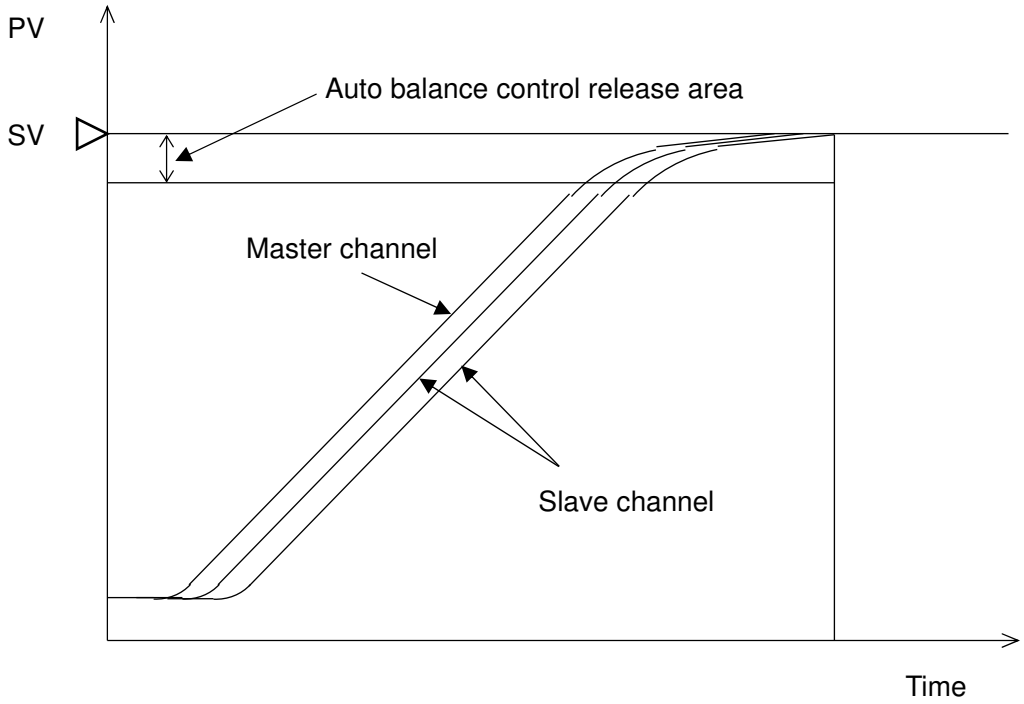

(Fig. 14.3.1-1)

Auto balance control interlock/alone selection

Select whether the auto balance control function is interlock or alone.
Both interlock and alone can be selected within one unit. However, connect the modules for which Interlock is selected continuously for the number of communication management modules.
If the module for which Alone is selected is connected to the modules that are connected in succession, the subsequent modules will not be linked.

- Interlock
  Performs the auto balance control between modules.
  Auto balance control can be performed as one group within one unit consisting of communication expansion module QMC1 or control module QTC1-4P and control module QTC1-40.
- Alone
  Performs auto balance control within the module.
  You can use the channels in the control module for auto balance control.

When select interlock and use control module QTC1-4P

Setting example when 6 channels are used for auto balance control with interlock and 6 channels are used for normal control

	Control module 1 QTC1-4P (with power supply/communication option)				Control module 2 QTC1-40 (no power supply/communication option)				Control module 3 QTC1-40 (no power supply/communication option)			
Channel	CH1	CH2	CH3	CH4	CH1	CH2	CH3	CH4	CH1	CH2	CH3	CH4
Auto balance control interlock/alone selection	Interlock				Interlock				Alone			
Auto balance control Enabled/ Disabled selection	Enabled			Disabl ed	Enabled			Disabl ed	Disabled			
Auto balance control master/slave selection (input channel No.)	1: CH1 Master channel				0: Slave channel				0: Slave channel			

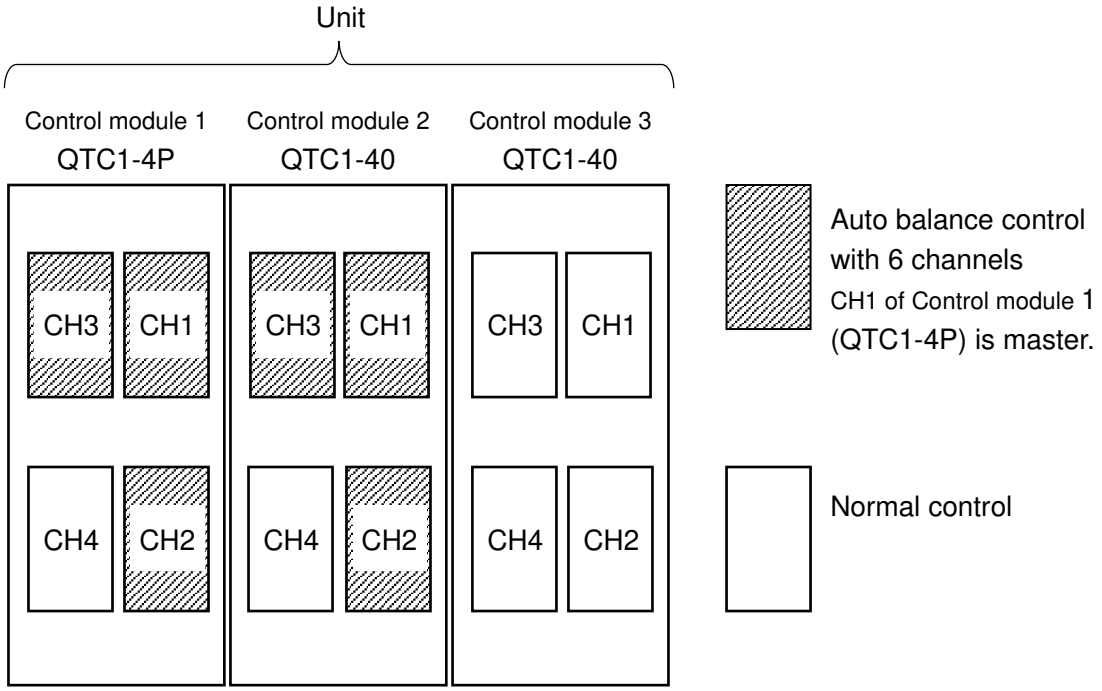

(Fig. 14.3.1-2)

[Description]

- The following channels for which Enabled is selected in Auto balance control Enabled/Disabled selection are grouped as one group, and CH1 of Control module 1 (QTC1-4P) is used as a master for auto balance control.
  CH1 to CH3 of Control module 1 (QTC1-4P)
  CH1 to CH3 of Control module 2 (QTC1-40)
- The following channels for which Enabled is selected in Auto balance control Enabled/Disabled selection performs normal control.
  CH4 of Control module 1(QTC1-4P)
  CH4 of Control module 2(QTC1-40)
  CH1 to CH4 of Control module 3(QTC1-40)

When select interlock and use communication expansion module QMC1

Setting example when 6 channels are used for auto balance control with interlock and 6 channels are used for normal control

	Control module 1 QTC1-40 (no power supply/communication option)				Control module 2 QTC1-40 (no power supply/communication option)				Control module 3 QTC1-40 (no power supply/communication option)			
Channel	CH1	CH2	CH3	CH4	CH1	CH2	CH3	CH4	CH1	CH2	CH3	CH4
Auto balance control interlock/alone selection	Interlock				Interlock				Alone			
Auto balance control Enabled/ Disabled selection	Enabled			Disa bled	Enabled			Enab led	Disabled			
Auto balance control master/slave selection (input channel No.)	2: CH2 Master channel				0: Slave channel				0: Slave channel			

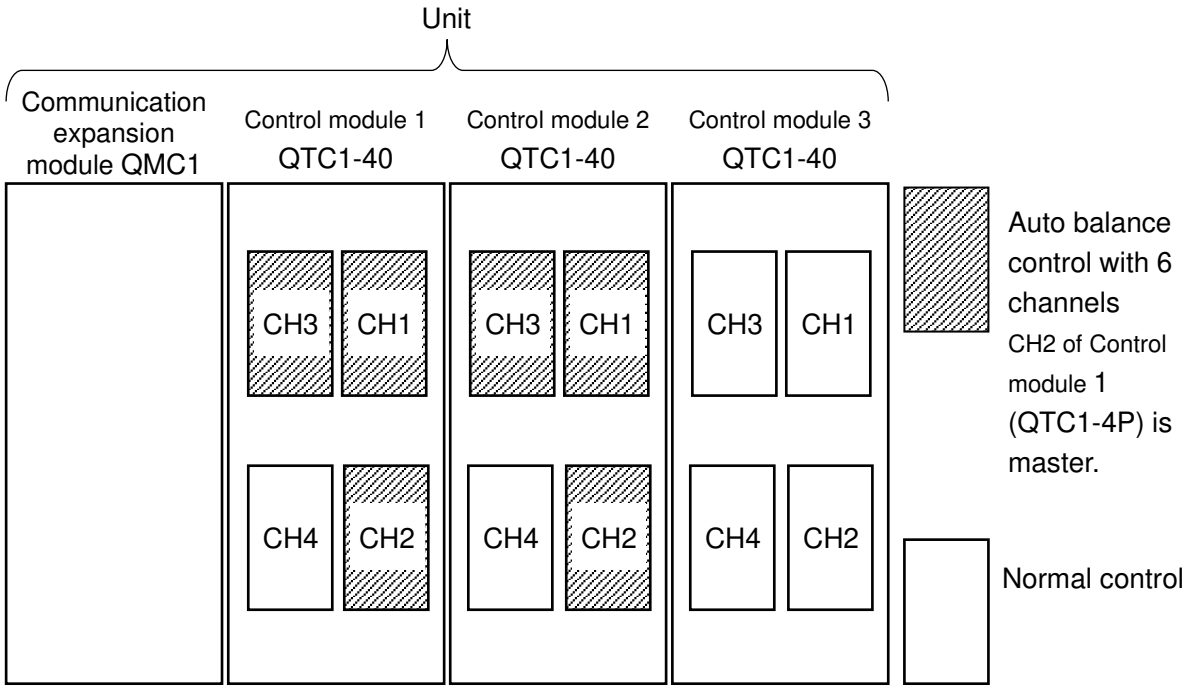

(Fig. 14.3.1-3)

[Description]

- The following channels for which Enabled is selected in Auto balance control Enabled/Disabled selection are grouped as one group, and CH2 of Control module 1 (QTC1-40) is used as a master for auto balance control.
  CH1 to CH3 of Control module 1(QTC1-40)
  CH1 to CH3 of Control module 2(QTC1-40)
- The following channels for which Enabled is selected in Auto balance control Enabled/Disabled selection performs normal control.
  CH4 of Control module 1(QTC1-40)
  CH4 of Control module 2(QTC1-40)
  CH1 to CH4 of Control module 3(QTC1-40)
- The communication expansion module (QMC1) transfers data between control modules.

When select alone

Setting example when 4 channels are used for auto balance control with alone and 8 channels are used for normal control

	Control module 1 QTC1-4P(with power supply/communication option)				Control module 2 QTC1-40 (no power supply/communication option)				Control module 3 QTC1-40 (no power supply/communication option)			
Channel	CH1	CH2	CH3	CH4	CH1	CH2	CH3	CH4	CH1	CH2	CH3	CH4
Auto balance control interlock/alone selection	Alone				Alone				Alone			
Auto balance control Enabled/ Disabled selection	Disabled				Disabled				Enabled			
Auto balance control master/slave selection (input channel No.)	0: Slave channel				0: Slave channel				4: CH4 Master channel			

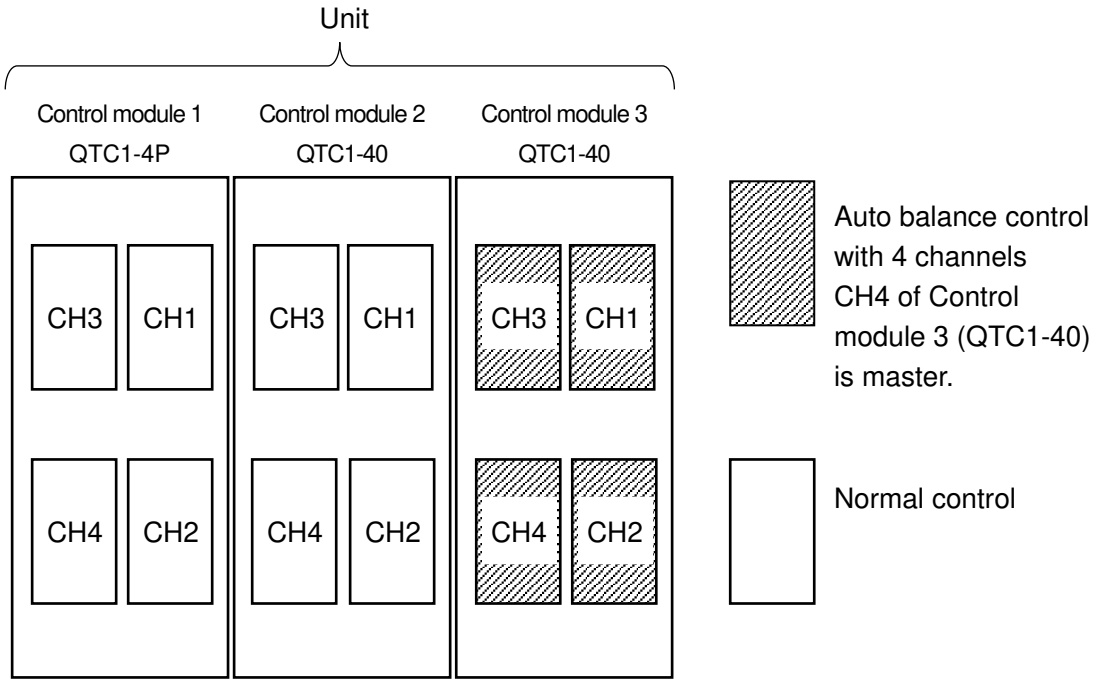

(Fig. 14.3.1-4)

[Description]

- The following channels for which Enabled is selected in Auto balance control Enabled/Disabled selection are grouped as one group, and CH4 of Control module 3 (QTC1-40) is used as a master for auto balance control.
  CH1 to CH4 of Control module 3(QTC1-40)
- The following channels for which Disabled is selected in Auto balance control Enabled/Disabled selection performs normal control.
  CH1 to CH4 of Control module 1(QTC1-4P)
  CH1 to CH4 of Control module 2(QTC1-40)

Auto balance control start output setting

When using the auto balance control function, the target value of the master channel is SV, but the SV of the slave channel becomes the PV of the master channel, so the slave channel does not start the auto balance control unless the master channel heats up. ..

As a result, the temperature of the slave channel is delayed and a temperature difference with the master channel is generated, so that the MV is set so that the output of the slave channel turns on when auto balance control starts in order to prevent deterioration of simultaneity.

The setting value of 0.00 to 1.00 corresponds to 0 to 100%.

Auto balance control start condition

The auto balance control is started in the following cases.

- When input is not burnout or underscale
- When AT Cancel is selected in AT Perform/Cancel
- When master is selected in master/slave selection
- When Reverse action is selected in Direct/Reverse action selection
- When the heater burnout alarm or loop break alarm is not generated

Auto balance control release range setting

The auto balance control is canceled in the following cases.

- When input is not burnout or underscale
- When AT Perform is selected in AT Perform/Cancel
- When Direct action is selected in Direct/Reverse action selection
- When a Heater burnout alarm or Loop break alarm occurs on the master channel. However, if a Heater burnout alarm or Loop break alarm occurs on a slave channel, the auto balance control is canceled only for that channel.
- When Control Prohibited is selected in Control Enable/Prohibited selection

Auto balance control release area setting

When the PV of the master channel reaches the autobalance control release area and when the PV of each slave channel reaches the autobalance control release area, the auto balance control function is released.

Master channel PV ≧ Master channel SV - Auto balance control release area

(When 0 is set, the auto balance control release area is twice the proportional band of the master channel.)

Slave channel PV ≧ Slave channel SV - Auto balance control release area

(When 0 is set, the auto balance control release area is twice the proportional band of the master channel.)

Number of communication management module setting

Set the number of units including the master module.

If two slave modules for interlock are connected, set them as three.

14.3.2 Output Gain – Bias Function

When controlling the temperature of the metal plate, the heater is controlled at multiple points. However, if multiple outputs are used for the inputs and the distribution of the output amount is known in advance, the ratio and bias for MV (reference output) can be set to perform uniform control.

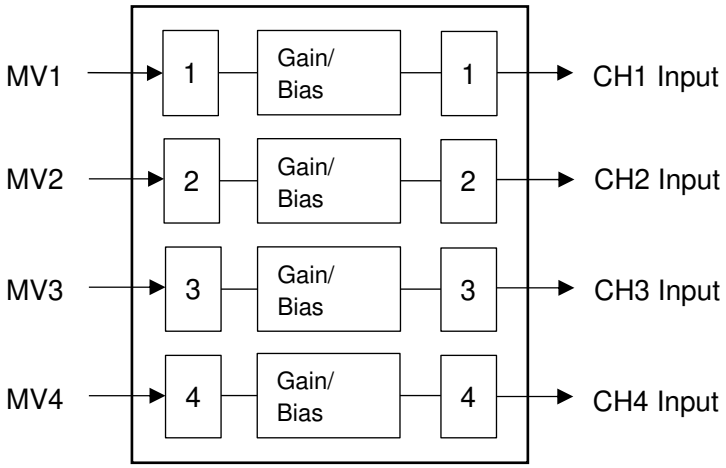

(Fig. 14.3.2-1)

14.3.3 Input Math Function

In Input math function selection, select Standard, Difference input or Addition input.

The input math function selected for CH1 corresponds to CH1 and CH2, and the input math function selected for CH3 corresponds to CH3 and CH4. However, if heating/cooling control, cascade control or output selection function is selected for control function selection, the input math function is invalid.

Standard	The input value of CH is used as PV for control.
Difference input	The temperature difference between CH1 and CH2 is used as the PV for CH1 and is controlled by CH1. CH1 PV = CH1 PV - CH2 PV The temperature difference between CH3 and CH4 is used as the PV for CH3 and is controlled by CH3. CH3 PV = CH3 PV - CH4 PV Each setting value such as scaling and PV filter time constant can be set for each channel. When performing AT with the differece input specifications, execute AT individually for each channel and then select differece input.
Addition input	The added value of CH1 and CH2 is used as the PV for CH1 and is controlled by CH1. CH1 PV = CH1 PV + CH2 PV The added value of CH3 and CH4 is used as the PV for CH3 and is controlled by CH3. CH3 PV = CH3 PV + CH4 PV Each setting value such as scaling and PV filter time constant can be set for each channel. When performing AT with the addition input specifications, execute AT individually for each channel and then select addition input.

14.3.4 Input Difference Selection

Input difference selection detects the input difference between the current channel and the selected channel, and when the input difference detection setting exceeds the set value, the input difference flag of status flag 1 B12: Set “out of range”. However, this function does not work when the own channel is selected in input difference selection.

14.3.5 Combination of Functions

(1) About combination of control action selectiton / output selection and control function / extension function

○: Can be combined
×: Cannot be combined

Control action selectiton / Output selection / Control function / Extension function	Control action selectiton					Output selection
	2 DOF PID control	Fast-PID control	Slow-PID control	ON/OFF control action	Gap-PID control	
Heating/Cooling control	○	○	○	○	○	×
Cascade control	○	○	○	○	×	×
Auto balance control function	×	×	○	×	×	○
Output gain-bias function	○	○	○	○	○	○
Input math function	○	○	○	○	○	○

(2) About combination of control function and extension function

○: Can be combined
×: Cannot be combined (If set, operation cannot be guaranteed)

	Heating/ Cooling control	Cascade control	Auto balance control function	Output gain-bias function	Input math function
Heating/Cooling control		○(*1)(*2)	○(*1)	×	○
Cascade control	○(*1)(*2)		×	○(*1)	
Auto balance control function	○(*1)	×		×	×
Output gain-bias function	×	○(*1)	×		×
Input math function	○	×	×	×	

(*1): It cannot be used together with output selection.

(*2): When using Heating/Cooling control with one system, you can select Cascade control for CH3 and CH4. When Cascade control is used in one system, CH3 and CH4 can be selected as Heating/Cooling control.

(3) About combinations within modules and units

○: Can be combined
×: Cannot be combined

	Within modules	Within units
Heating/Cooling control	○	×
Cascade control	○	×
Auto balance control function	○	○
Output gain-bias function	○	×
Input math function	○	×

14.4 Attached Function

14.4.1 Power Failure Countermeasure

The non-volatile IC memory backs up the setting data.

14.4.2 Self-Diagnosis

The watchdog timer monitors the CPU, and when an error occurs, all outputs are turned off and the instrument is initialized.

14.4.3 Automatic Cold Junction Temperature Compensation

Detect the temperature of the connection terminal between the thermocouple and the instrument, and make it the same as if the reference contact is always set to 0 °C (32 °F). (Only valid for channels for which thermocouple input is selected.)

14.4.4 PV Filter Time Constant

This is a function to stabilize the PV of the process (pressure, flow rate, etc.) where the PV fluctuation before the PV filter processing is performed by performing the temporary delay calculation of the PV before the PV filter processing with the filter function on the software.

When PV before PV filter processing changes stepwise as shown in (Fig. 14.4.4-1), if PV time constant (T) is set, PV filter will be set after T seconds as shown in (Fig. 14.4.4-2). It changes to reach 63% of the PV after treatment.

If the set value is too large, the control result may be adversely affected by the delay in response.

0.0 to 10.0 seconds

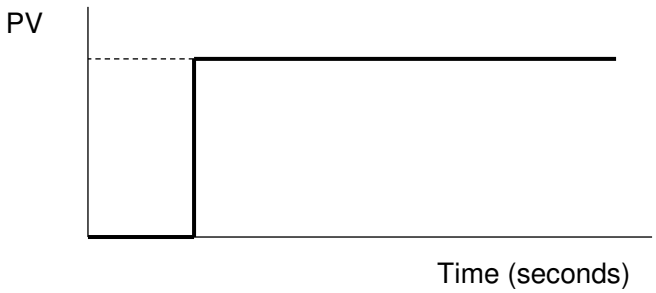

(Fig. 14.4.4-1)

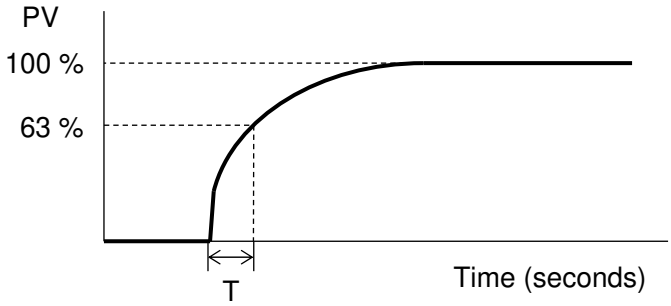

(Fig. 14.4.4-2)

14.4.5 CH Enable/Disable

Select enable or disable for each channel.

When disabled is selected, all operations are disabled for the selected channel and PV becomes 0.

14.4.6 Overscale

In the case of the following input range, overscale will occur and B1: Input error (overscale) of status flag 1 will be set to "1: Error". However, control continues during overscale.

For thermocouple input (no decimal point)

Rated high limit to Input range high limit + 50 °C (90 °F)

For thermocouple input (with decimal point) and RTD input

Rated high limit to Input range high limit + 50.0 °C (90.0 °F)

For DC current input and DC voltage input

Scaling high limit to Scaling high limit + Scaling width × 10 %

14.4.7 Underscale

In the case of the following input range, underscale will occur and B5: Input error (underscale) of status flag 1 will be set to "1: Error". However, control continues during underscale.

For thermocouple input (no decimal point)

Input range low limit - 50 °C (90 °F) to Rated low limit

For thermocouple input (with decimal point) and RTD input

Input range low limit - (Input span × 1 %) °C (°F) to Rated low limit

For DC current input and DC voltage input

Scaling low limit - Scaling width × 1 % to Scaling low limit

14.4.8 Sensor Error

In the case of the following, a sensor error will occur, B5: sensor error of status flag 2 will be set to "1: error", and the control output will be turned off.

Sensor error condition for thermocouple input (no decimal point)

When the input range low limit is less than -50 °C (90 °F) and exceeds the input range high limit +50 °C (90 °F)

At this time, PV is fixed to the of input range low limit -50 °C (90 °F)-1 digit and the input range high limit +50 °C (90 °F)+1 digit.

Sensor error condition for thermocouple input (with decimal point) and RTD input

When the input range low limit is less than -50 °C (90 °F) and exceeds the input range high limit +50 °C (90 °F)

At this time, PV is fixed to the of input range low limit -50 °C (90 °F)-1 digit and the input range high limit +50 °C (90 °F)+1 digit.

Sensor error condition for DC current input and DC voltage input

When 4 to 20 mA DC and 1 to 5 V DC

Scaling low limit – Scaling width × 1% or less

At this time, PV is fixed to Scaling lower limit - Scaling width × 1%-1 digit.

When 0 to 1 V DC

Scaling high limit + Scaling width × 10 % or more

At this time, PV is fixed Scaling high limit + scaling width × 1% + 1 digit.

When 0 to 20 mA DC, 0 to 5 V DC and 0 to 10 V DC

Value at 0 mA DC or 0 V DC input

14.4.9 Cold Junction Error

If the internal cold junction temperature is less than -10 °C (14 °F) or more than 55 °C (131 °F), a cold junction error will occur and B4: Cold junction error of status flag 2 will be "1: Error". Set. (Valid only for channels for which thermocouple input is selected)

14.4.10 ADC Error

If there is an abnormality such as a failure in the internal circuit, an ADC error occurs, B6: ADC error of status flag 2 is set to "1: Error", and the control output of the channel in which the error occurred is turned off.

At this time, PV becomes 32767.

14.4.11 Warm-up indication

The power indicator flashes every 500 ms for about 3 seconds after the power is turned on.

14.4.12 Contact Switching Total Number of Times

The control output ON/OFF count can be integrated and measured.

ON/OFF is set as one time and totaling is performed.

This allows you to grasp the approximate contact life as the number of switching times of the switch used externally. However, since the saving cycle is 1 hour, the number of times within 1 hour may not be saved due to a power failure.

14.4.13 Total Energizing Time

It can check the time that the power is on.

The accumulated time is saved every 10 minutes.

It can grasp the approximate usage time from the accumulated time. However, since the save cycle is 10 minutes, the time within 10 minutes may not be saved due to a power failure.

Total energizing time: 10 minutes/count

14.4.14 Heater Accumulated Energizing Time

For relay contact output or non-contact voltage output, you can check the cumulative time the heater is energized.

When the output time to the heater reaches 1 minute cumulatively, the count is added.

The accumulated time is saved every 10 minutes.

The accumulated time can be used to understand the approximate usage period of the heater, which can be used as a guide for replacing the heater. However, since the save cycle is 10 minutes, the time within 10 minutes may not be saved due to a power failure.

Cumulative heater energization time: 1 minute/count

14.4.15 Error History

When an error occurs, the bit ON/OFF and accumulated energization time are saved for the past 10 times.

Error history exists for each channel, and device common errors are saved in the error history of all channels.

Total energizing time: 1 hour/count

Bit	Error content		
B0	Alarm 1	0: Normal	1: Error
B1	Alarm 2	0: Normal	1: Error
B2	Alarm 3	0: Normal	1: Error
B3	Alarm 4	0: Normal	1: Error
B4	Heater burnout alarm	0: Normal	1: Error
B5	Undefined		
B6	Loop break alarm	0: Normal	1: Error
B7	Sensor error	0: Normal	1: Error
B8	Input error (Overscale)	0: Normal	1: Error
B9	Input error (Underscale)	0: Normal	1: Error
B10	Cold junction error	0: Normal	1: Error
B11	Non-volatile IC memory error	0: Normal	1: Error
B12	ADC error	0: Normal	1: Error
B13	Undefined		
B14	Undefined		
B15	Undefined		

14.5 Operation Diagram

14.5.1 Control Output Operation Diagram

Action	Reverse (Heating) action	Direction (Cooling) action
Control action	Proportional band ON OFF SV	Proportional band ON OFF SV
Relay contact output Triac output	⑪ ⑫ ⑪ ⑫ ⑪ ⑫ Periodic action according to deviation	⑪ ⑫ ⑪ ⑫ ⑪ ⑫ Periodic action according to deviation
Non-contact voltage output	+ ⑪ 12 V DC ⑫ - + ⑪ 12/0 V DC ⑫ - + ⑪ 0 V DC ⑫ - Periodic action according to deviation	+ ⑪ 0 V DC ⑫ - + ⑪ 0/12 V DC ⑫ - + ⑪ 12 V DC ⑫ - Periodic action according to deviation
DC current input DC voltage input	+ ⑪ 20 mA DC ⑫ - + ⑪ 20 to 4 mA DC ⑫ - + ⑪ 4 mA DC ⑫ - Change continuously according to deviation	+ ⑪ 4 mA DC ⑫ - + ⑪ 4 to 20 mA DC ⑫ - + ⑪ 20 mA DC ⑫ - Change continuously according to deviation
Open collector output	⑪ ON ⑫ ⑪ ON/OFF ⑫ ⑪ OFF ⑫ Periodic action according to deviation	⑪ OFF ⑫ ⑪ OFF/ON ⑫ ⑪ ON ⑫ Periodic action according to deviation
Display (O1) Green	ON / OFF	OFF / ON

: Operates ON or OFF.

CH2 control output: ⑯ ⑰, Display O2

CH3 control output: ⑤ ④, Display O3

CH4 control output: ⑩ ⑨, Display O4

14.5.2 Control Output ON/OFF Operation Diagram

Action	Reverse (Heating) action	Direction (Cooling) action
Control action	Hysteresis ON OFF SV	Hysteresis ON OFF SV
Relay contact output Triac output	⑪ ⑫ ⑪ ⑫	⑪ ⑫ ⑪ ⑫
Non-contact voltage output	+ ⑪ 12 V DC - ⑫ + ⑪ 0 V DC ⑫	+ ⑪ 0 V DC - ⑫ + ⑪ 12 V DC - ⑫
DC current input DC voltage input	+ ⑪ 20 mA DC - ⑫ + ⑪ 4 mA DC - ⑫	+ ⑪ 4 mA DC - ⑫ + ⑪ 20 mA DC - ⑫
Open collector output	⑪ ON ⑫ ⑪ OFF ⑫	⑪ OFF ⑫ ⑪ ON ⑫
Display (O1) Green	ON OFF	OFF ON

: Operates ON or OFF.

CH2 control output: ⑯ ⑰, Display O2

CH3 control output: ⑤ ④, Display O3

CH4 control output: ⑩ ⑨, Display O4

14.5.3 Alarm Operation Diagram

	High limit alarm	Low limit alarm
Alarm action	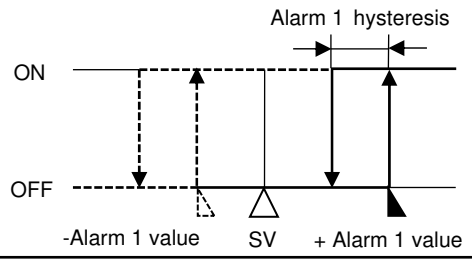	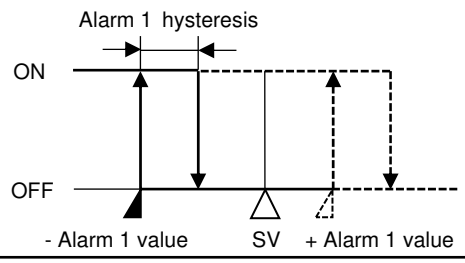
Alarm output		
	High/Low limits alarm	High/Low range alarm
Alarm action	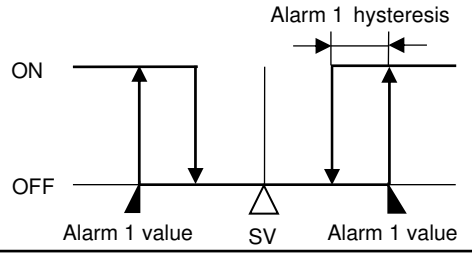	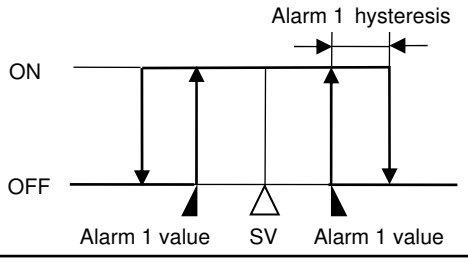
Alarm output	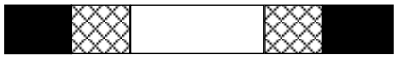	
	Process High alarm	Process Low alarm
Alarm action	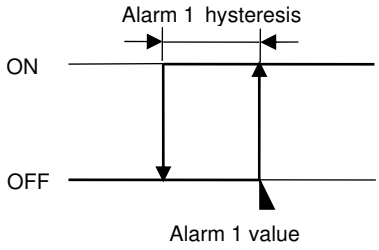	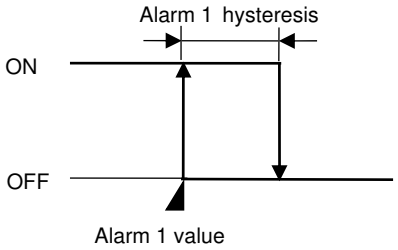
Alarm output		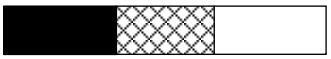
	High limit with standby	Low limit with standby
Alarm action	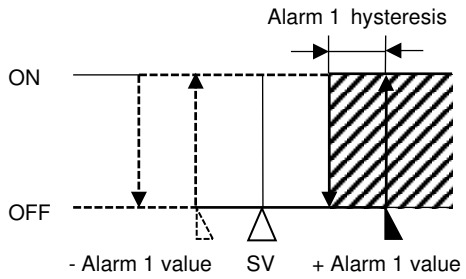	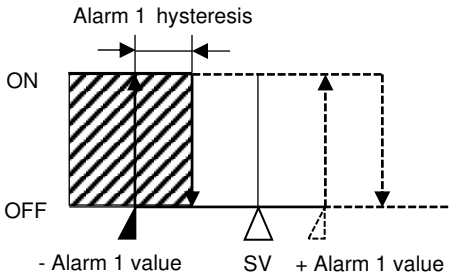
Alarm output		

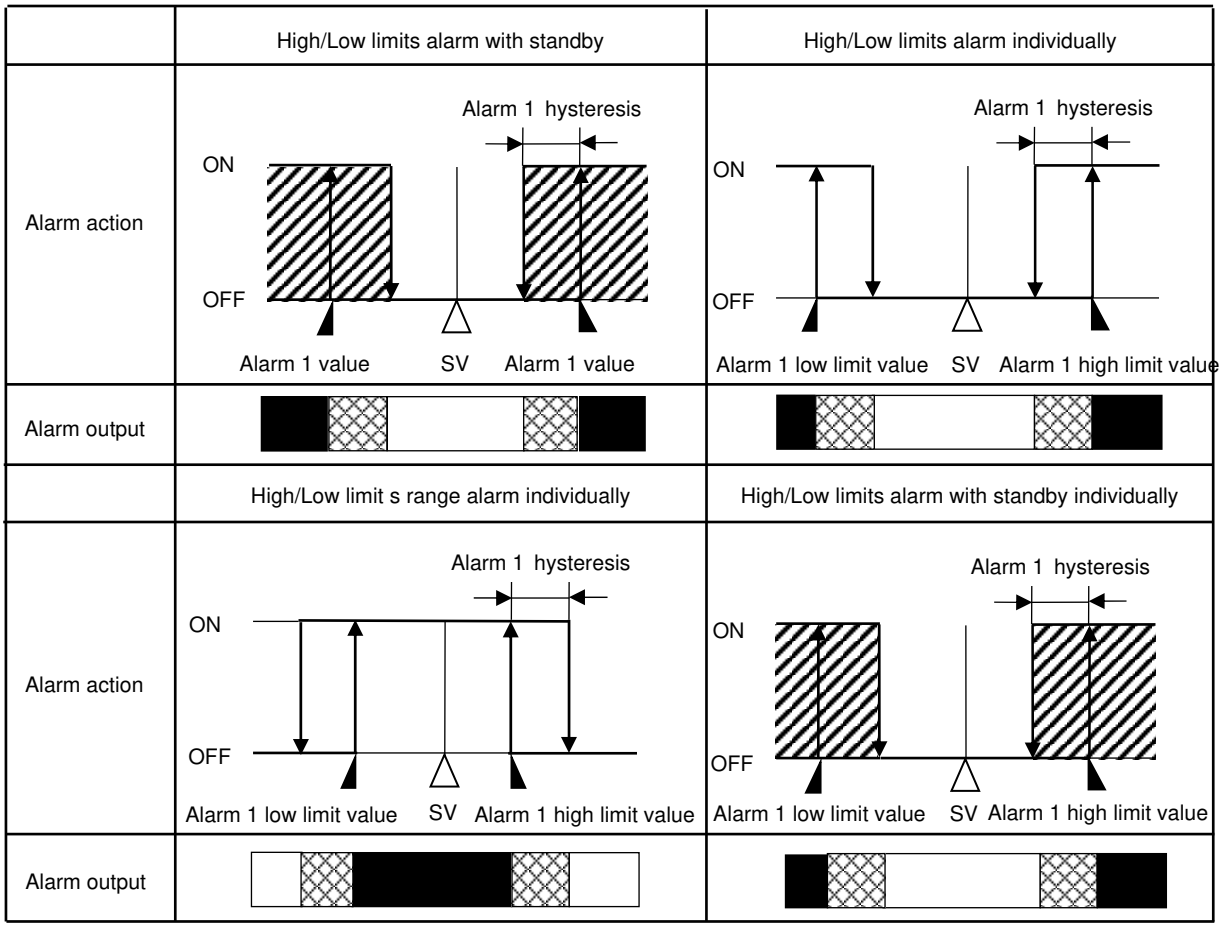

: Event output ON.

: Event output ON or OFF.

: Event output OFF.

: The standby function works in this part.

- Alarm 1 value, Alarm 1 high limit value, Alarm 1 low limit value and Alarm 1 hysteresis represent Alarm 1 value setting, Alarm 1 high limit value setting, Alarm 1 low limit value setting and Alarm 1 hysteresis setting, respectively.
  In the case of Alarm 2, Alarm 3 and Alarm 4, replace them respectively.
- The EVT indicator lights when the alarm output is ON and turns off when the alarm output is OFF.
- Event output works on the channel for which event output is selected in Event output allocation selection.

14.5.4 Heater Burnout Alarm Operation Diagram

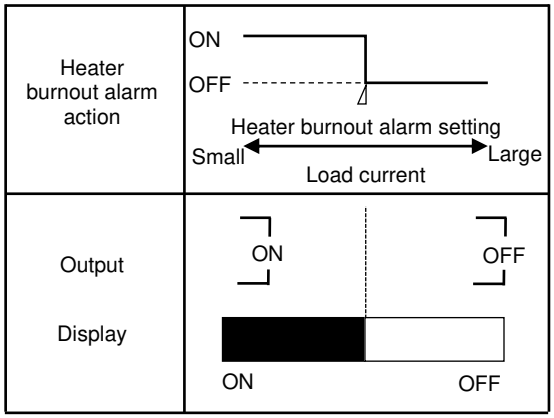

- The EVT indicator lights when the alarm output is ON and turns off when the alarm output is OFF.
- Event output works on the channel for which event output is selected in Event output allocation selection.

14.5.5 Heating/Cooling Control Operation Diagram

When heating/cooling control is selected for CH1 in control function selection

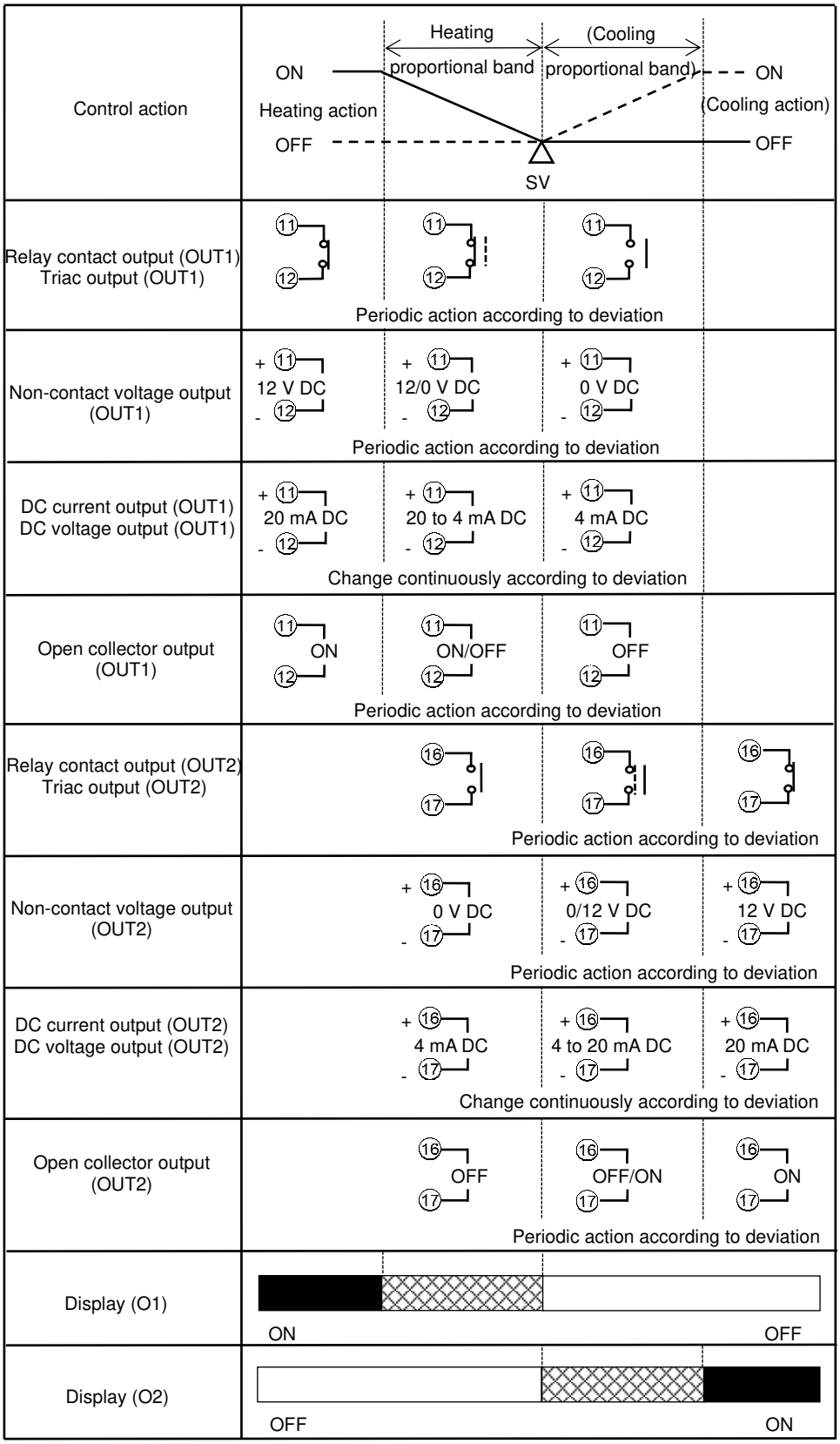

: ON or OFF

: Heating control action

: Cooling control action

When heating/cooling control is selected for CH1 in control function selection
CH3 control output (OUT1): ⑤ ④, Display O3
CH4 control output (OUT2): ⑩ ⑨, Display O4

14.5.6 Heating/Cooling Control Operation Diagram (When Setting Dead Band)

When heating/cooling control is selected for CH1 in control function selection

Control action	Heating proportional band / Dead band / (Cooling proportional band); ON, Heating action, OFF, SV; ON (Cooling action), OFF
Relay contact output (OUT1) Triac output (OUT1)	⑪ ⑫ ⑪ ⑫ ⑪ ⑫ Periodic action according to deviation
Non-contact voltage output (OUT1)	+ ⑪ 12 V DC - ⑫ / + ⑪ 12/0 V DC - ⑫ / + ⑪ 0 V DC - ⑫ Periodic action according to deviation
DC current output (OUT1) DC voltage output (OUT1)	+ ⑪ 20 mA DC - ⑫ / + ⑪ 20 to 4 mA DC - ⑫ / + ⑪ 4 mA DC - ⑫ Change continuously according to deviation
Open collector output (OUT1)	⑪ ON ⑫ / ⑪ ON/OFF ⑫ / ⑪ OFF ⑫ Periodic action according to deviation
Relay contact output (OUT2) Triac output (OUT2)	⑯ ⑰ ⑯ ⑰ ⑯ ⑰ Periodic action according to deviation
Non-contact voltage output (OUT2)	+ ⑯ 0 V DC - ⑰ / + ⑯ 0/12 V DC - ⑰ / + ⑯ 12 V DC - ⑰ Periodic action according to deviation
DC current output (OUT2) DC voltage output (OUT2)	+ ⑯ 4 mA DC - ⑰ / + ⑯ 4 to 20 mA DC - ⑰ / + ⑯ 20 mA DC - ⑰ Change continuously according to deviation
Open collector output (OUT2)	⑯ OFF ⑰ / ⑯ OFF/ON ⑰ / ⑯ ON ⑰ Periodic action according to deviation
Display (O1)	ON / OFF
Display (O2)	OFF / ON

: ON or OFF

: Heating control action

: Cooling control action

When heating/cooling control is selected for CH1 in control function selection
CH3 control output (OUT1): ⑤ ④, Display O3
CH4 control output (OUT2): ⑩ ⑨, Display O4

14.5.7 Heating/Cooling Control Operation Diagram (When Setting Overlap Band)

When heating/cooling control is selected for CH1 in control function selection

Control action	*1, *2, *3 ON — Heating action — OFF ON — (Cooling action) — OFF SV
Relay contact output (OUT1) Triac output (OUT1)	⑪ ⑫ Periodic action according to deviation
Non-contact voltage output (OUT1)	+ ⑪ 12 V DC - ⑫ + ⑪ 12/0 V DC - ⑫ + ⑪ 0 V DC - ⑫ Periodic action according to deviation
DC current output (OUT1) DC voltage output (OUT1)	+ ⑪ 20 mA DC - ⑫ + ⑪ 20 to 4 mA DC - ⑫ + ⑪ 4 mA DC - ⑫ Change continuously according to deviation
Open collector output (OUT1)	⑪ ON ⑫ ⑪ ON/OFF ⑫ ⑪ OFF ⑫ Periodic action according to deviation
Relay contact output (OUT2) Triac output (OUT2)	⑯ ⑰ Periodic action according to deviation
Non-contact voltage output (OUT2)	+ ⑯ 0 V DC - ⑰ + ⑯ 0/12 V DC - ⑰ + ⑯ 12 V DC - ⑰ Periodic action according to deviation
DC current output (OUT2) DC voltage output (OUT2)	+ ⑯ 4 mA DC - ⑰ + ⑯ 4 to 20 mA DC - ⑰ + ⑯ 20 mA DC - ⑰ Change continuously according to deviation
Open collector output (OUT2)	⑯ OFF ⑰ ⑯ OFF/ON ⑰ ⑯ ON ⑰ Periodic action according to deviation
Display (O1)	ON — OFF
Display (O2)	OFF — ON

*1: Heating proportional band
*2: Cooling proportional band
*3: Overlap

: ON or OFF
——— : Heating control action
- - - - : Cooling control action

When heating/cooling control is selected for CH1 in control function selection
CH3 control output (OUT1): ⑤ ④, Display O3
CH4 control output (OUT2): ⑩ ⑨, Display O4

15 Maintenance and Inspection

15.1 Maintenance

You can use the console software (SWC-QTC101M) to check the error history, cumulative number of contact switching operations, heater cumulative energization time, and so on.

Useful for failure prediction maintenance.

Error history

Click [Error history] of [Main screen] tab → [Error history].

Display the Error history screen.

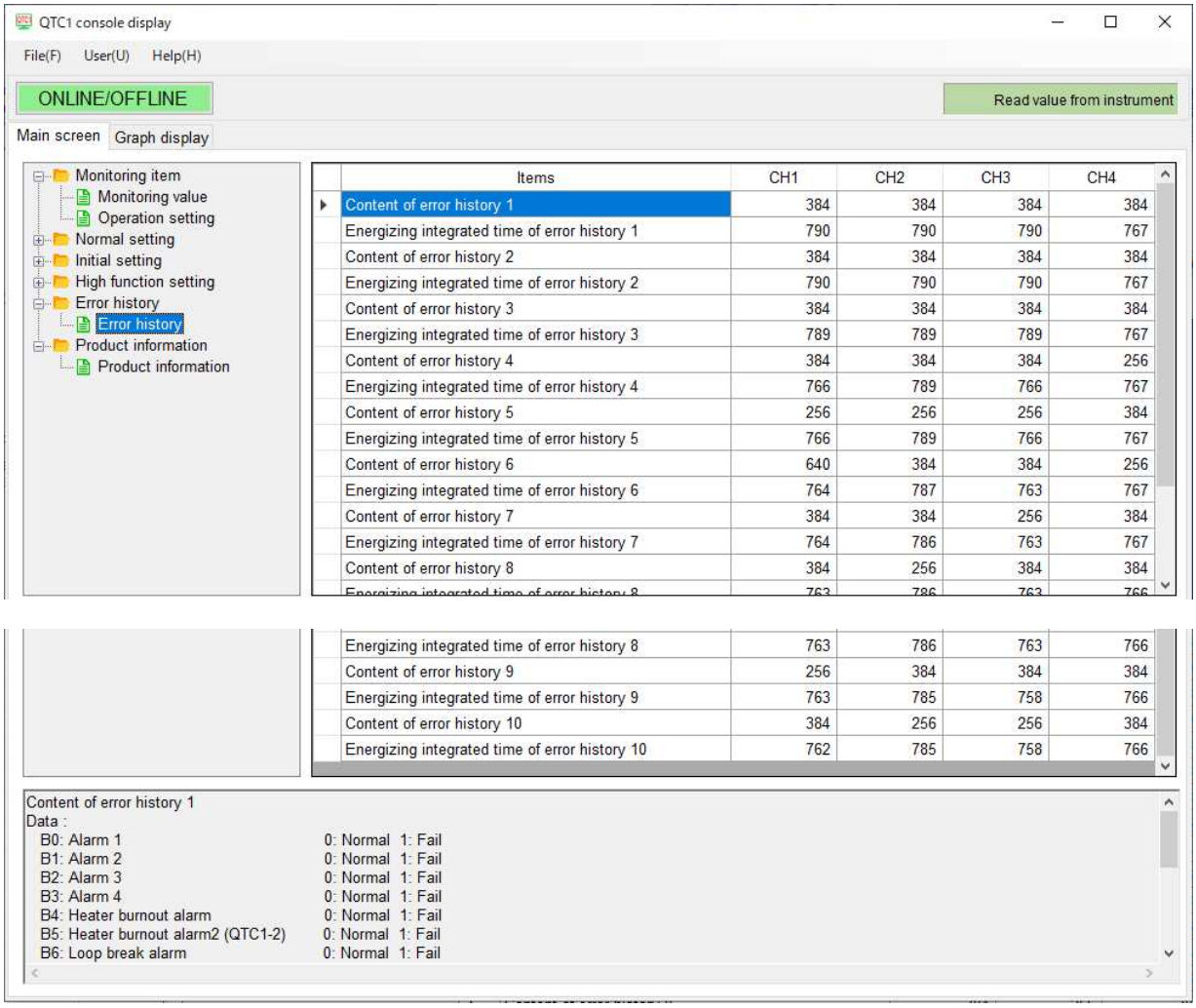

Items	CH1	CH2	CH3	CH4
Content of error history 1	384	384	384	384
Energizing integrated time of error history 1	790	790	790	767
Content of error history 2	384	384	384	384
Energizing integrated time of error history 2	790	790	790	767
Content of error history 3	384	384	384	384
Energizing integrated time of error history 3	789	789	789	767
Content of error history 4	384	384	384	256
Energizing integrated time of error history 4	766	789	766	767
Content of error history 5	256	256	256	384
Energizing integrated time of error history 5	766	789	766	767
Content of error history 6	640	384	384	256
Energizing integrated time of error history 6	764	787	763	767
Content of error history 7	384	384	256	384
Energizing integrated time of error history 7	764	786	763	767
Content of error history 8	384	256	384	384
Energizing integrated time of error history 8	763	786	763	766
Content of error history 9	256	384	384	384
Energizing integrated time of error history 9	763	785	758	766
Content of error history 10	384	256	256	384
Energizing integrated time of error history 10	762	785	758	766

(Fig. 15.1-1)

Content of error history1 to 10, Energizing integrated time of error history1 to 10

The types of error history for the last 10 times and the integrated energizing time when an error occurs are displayed.

It can be used for future predictions from past error history.

Types of error history

The types of error history are shown below.

Bit	Error history types and data	
B0	Alarm 1	0: Normal 1: Error
B1	Alarm 2	0: Normal 1: Error
B2	Alarm 3	0: Normal 1: Error
B3	Alarm 4	0: Normal 1: Error
B4	Heater burnout alarm	0: Normal 1: Error
B5	Undefined	
B6	Loop break alarm	0: Normal 1: Error
B7	Sensor error	0: Normal 1: Error
B8	Input error (Overscale)	0: Normal 1: Error
B9	Input error (Underscale)	0: Normal 1: Error
B10	Cold junction error	0: Normal 1: Error
B11	Non-volatile IC memory error	0: Normal 1: Error
B12	ADC error	0: Normal 1: Error
B13	Undefined	
B14	Undefined	
b15	Undefined	

Error history display

Error history is updated each time an error occurs. Error history 1 is always the latest.

After the 11th time, delete the old Error history.

Example: Error history 1 is deleted the 11th time and Error history 2 is deleted the 12th time.

Number of error / Error history	1st	2nd	3rd		8th	9th	10th	11th	12th
Error history 1	1st	2nd	3rd		8th	9th	10th	11th	12th
Error history 2		1st	2nd		7th	8th	9th	10th	11th
Error history 3			1st		6th	7th	8th	9th	10th
Error history 4					5th	6th	7th	8th	9th
Error history 5					4th	5th	6th	7th	8th
Error history 6					3rd	4th	5th	6th	7th
Error history 7					2nd	3rd	4th	5th	6th
Error history 8					1st	2nd	3rd	4th	5th
Error history 9						1st	2nd	3rd	4th
Error history 10							1st	2nd	3rd
Delete error history								1st	2nd

Integration time of contact switching・Integral electrification time・Cumulative electrification time of heater

Click [Product information] of [Main screen] tab → [Product information].

Display the Product information screen.

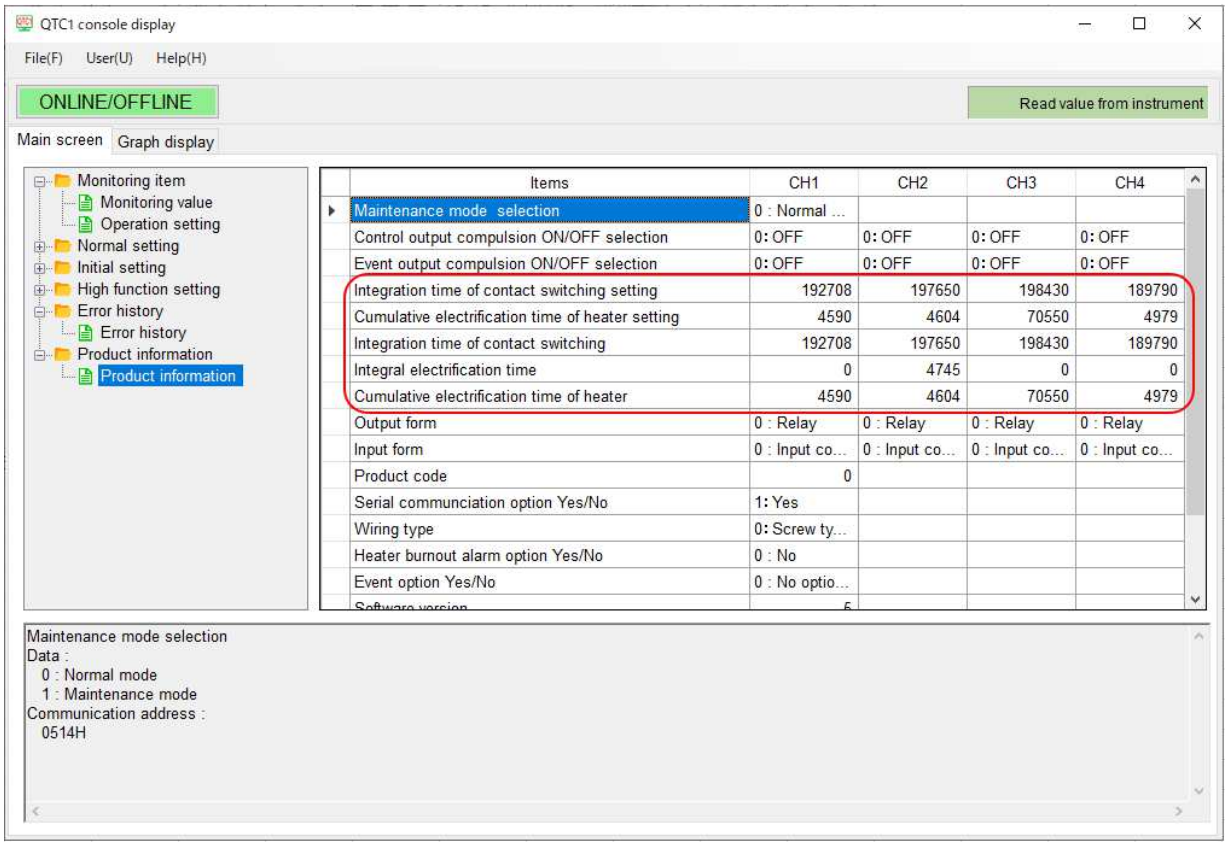

(Fig. 15.1-2)

Integration time of contact switching setting

Set when replacing the control module or relay.

Cumulative electrification time of heater setting

Set when replacing the control module or heater.

Integration time of contact switching

It can be used to check the guideline for relay replacement time.

Integral electrification time

It can be used to check the product life of the control module itself.

Cumulative electrification time of heater

It can be used to check the guideline of heater product life.

15.2 Inspection

Control output compulsion ON/OFF and event output compulsion ON/OFF can be performed by selecting the maintenance mode using the console software (SWC-QTC101M).
Useful for checking wiring.

Control output compulsion ON/OFF・Event output compulsion ON/OFF

Click [Product information] of [Main screen] tab → [Product information].

Display the Product information screen.

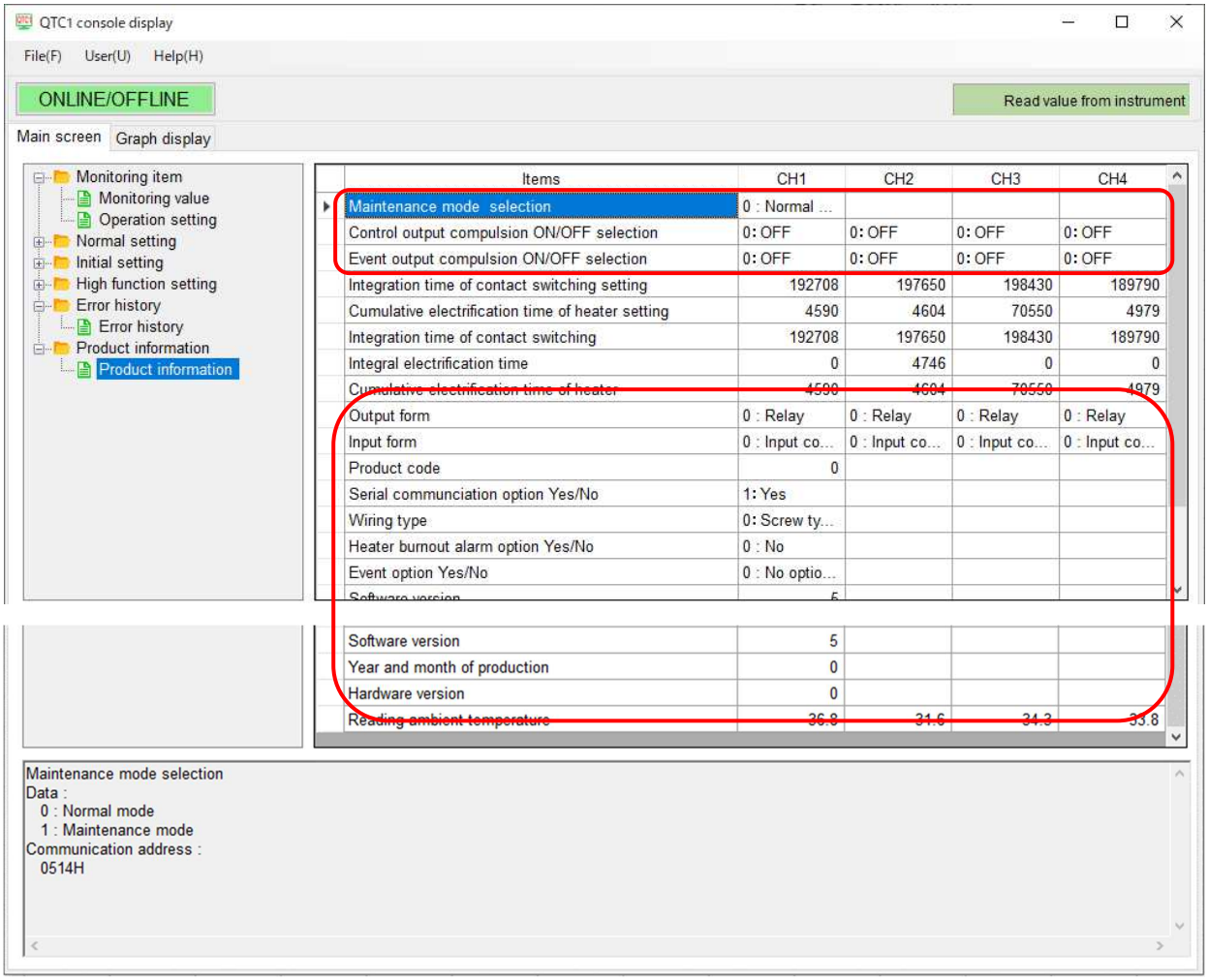

(Fig. 15.2-1)

Maintenance mode selection

Normal mode: Normal control is performed.

Maintenance mode: Only the reading of the input is valid and the control output and event output are turned off.

Control output compulsion ON/OFF selection

Control output is forcibly turned ON/OFF. It can be used to check the wiring in the operating state.

Event output compulsion ON/OFF selection

Event output is forcibly turned ON/OFF. It can be used to check the wiring in the operating state.

Product information

It can check the product information from the output form, input form, and product code.

Item	Product information example
Product code	QTC1-4
Serial communication option	P: With power supply / upper communication function
Wiring type	T: Terminal type
Output form	R: Relay contact output
Input form	A: DC current input
Heater burout alarm option	A: CT 4 points 100 A
Event option	2: Event output (4 points)
Software version	Software version
Year and month of production	Year and month of production
Hardware version	Hardware version

16 Specifications

16.1 Standard Specifications

Rating

<table>
<tr><td>Rated scale</td><td>
<table>
<tr><th>Input</th><th colspan="2">Input Range</th><th>Resolution</th></tr>
<tr><td>K</td><td>-200 to 1370 °C</td><td>-328 to 2498 °F</td><td>1 °C (°F)</td></tr>
<tr><td>K</td><td>-200.0 to 400.0 °C</td><td>-328.0 to 752.0 °F</td><td>0.1 °C (°F)</td></tr>
<tr><td>J</td><td>-200 to 1000 °C</td><td>-328 to 1832 °F</td><td>1 °C (°F)</td></tr>
<tr><td>R</td><td>0 to 1760 °C</td><td>32 to 3200 °F</td><td>1 °C (°F)</td></tr>
<tr><td>S</td><td>0 to 1760 °C</td><td>32 to 3200 °F</td><td>1 °C (°F)</td></tr>
<tr><td>B</td><td>0 to 1820 °C</td><td>32 to 3308 °F</td><td>1 °C (°F)</td></tr>
<tr><td>E</td><td>-200 to 800 °C</td><td>-328 to 1472 °F</td><td>1 °C (°F)</td></tr>
<tr><td>T</td><td>-200.0 to 400.0 °C</td><td>-328.0 to 752.0 °F</td><td>0.1 °C (°F)</td></tr>
<tr><td>N</td><td>-200 to 1300 °C</td><td>-328 to 2372 °F</td><td>1 °C (°F)</td></tr>
<tr><td>PL-Ⅱ</td><td>0 to 1390 °C</td><td>32 to 2534 °F</td><td>1 °C (°F)</td></tr>
<tr><td>C(W/Re5-26)</td><td>0 to 2315 °C</td><td>32 to 4199 °F</td><td>1 °C (°F)</td></tr>
<tr><td>Pt100</td><td>-200.0 to 850.0 °C</td><td>-328.0 to 1562.0 °F</td><td>0.1 °C (°F)</td></tr>
<tr><td>0 to 1 V DC</td><td colspan="2">-2000 to 10000 (Scaling possible)</td><td>1</td></tr>
<tr><td>4 to 20 mA DC</td><td colspan="2">-2000 to 10000 (Scaling possible)</td><td>1</td></tr>
<tr><td>0 to 20 mA DC</td><td colspan="2">-2000 to 10000 (Scaling possible)</td><td>1</td></tr>
<tr><td>0 to 5 V DC</td><td colspan="2">-2000 to 10000 (Scaling possible)</td><td>1</td></tr>
<tr><td>1 to 5 V DC</td><td colspan="2">-2000 to 10000 (Scaling possible)</td><td>1</td></tr>
<tr><td>0 to 10 V DC</td><td colspan="2">-2000 to 10000 (Scaling possible)</td><td>1</td></tr>
</table>
Scaling possible. However, in the case of thermocouple input and RTD input, it works as SV low limit to SV high limit.
When the scaling high limit and scaling low limit are set to the same value, the control output turns OFF.
</td></tr>
</table>

Input

<table>
<tr><td>Input</td><td>
<table>
<tr><td>Thermocouple input</td><td>K, J, R, S, B, E, T, N, C (W/Re5-26) (JIS C1602-2015)
PL-II (ASTM E1751M-15)
External resistance: 100 Ω or less (B 40 Ω or less)</td></tr>
<tr><td>RTD input</td><td>Pt100 3-wire type (JIS C1604-2013)
Allowable input lead wire resistance: 10 Ω or less per wire</td></tr>
<tr><td>DC current input</td><td>0 to 20 mA DC, 4 to 20 mA DC
Input impedance: 50 Ω
Allowable input current: 50 mA or less</td></tr>
<tr><td rowspan="2">DC voltage input</td><td>0 to 1 V DC
Input impedance: 1 MΩ or more
Allowable input voltage: 5 V DC or less
Allowable signal source resistance: 2 kΩ or less</td></tr>
<tr><td>0 to 5 V DC, 1 to 5 V DC, 0 to 10 V DC
Input impedance: 100 kΩ or more
Allowable input voltage: 15 V DC or less
Allowable signal source resistance: 100 Ω or less</td></tr>
</table>
</td></tr>
<tr><td>Event input</td><td>
<table>
<tr><td>Input points</td><td>4 points</td></tr>
<tr><td>Input type</td><td>Voltage contact input sink type</td></tr>
<tr><td>Circuit current when closed</td><td>Approx. 6 mA</td></tr>
<tr><td>Reading judgment time</td><td>Approx. 100 ms</td></tr>
</table>
</td></tr>
</table>

Output

Control output	
	Relay contact output: 1a Control capacity: 3 A 250 V AC (resistive load) 1 A 250 V AC (inductive load cosϕ =0.4) Electrical life: 100,000 cycles Minimum applicable load: 10 mA 5 V DC
	Non-contact voltage (for SSR drive) output: 12 V DC ±15 % Max. 40 mA (short circuit protected) Non-isolated between power supply and output
	DC current output: 4 to 20 mA DC, 0 to 20 mA DC Resolution: 12000 Resolution Load resistance: Max. 550 Ω Non-isolated between power supply and output
	DC voltage output: 0 to 1 V DC, 0 to 5 V DC, 1 to 5 V DC, 0 to 10 V DC Resolution: 12000 Allowable load resistance: 1 kΩ or more Non-isolated between power supply and output
	Open collector output: NPN Allowable load current: 100 mA or less Load voltage: 30 V DC or less
	Triac output: AC output Zero-cross type Allowable load current: 0.5 A or less Load voltage: 75 to 250 V AC
Event output	
	Output points: 4 points
	Circuit: NPN open collector
	Max. load voltage: 30 V DC
	Max. load capacity: 50 mA

Power supply

Power supply voltage	24 V DC Allowable voltage fluctuation: 20 to 28 V DC
Power consumption	5 W or less
Inrush current	Max. 10 A

Circuit insulation configuration	Relay contact output, Open collector output, Triac output 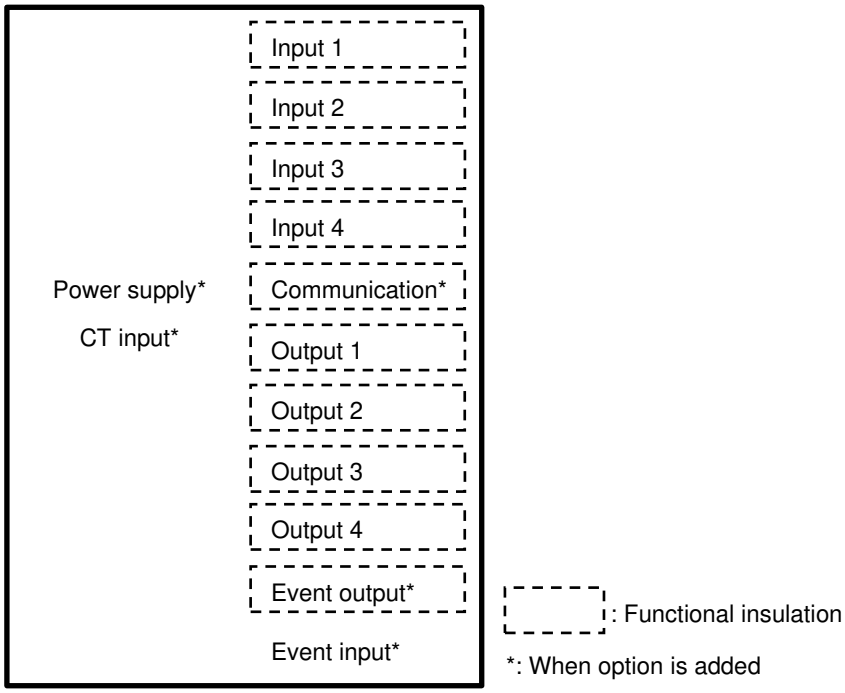 Non-contact voltage output, DC current output, DC voltage output 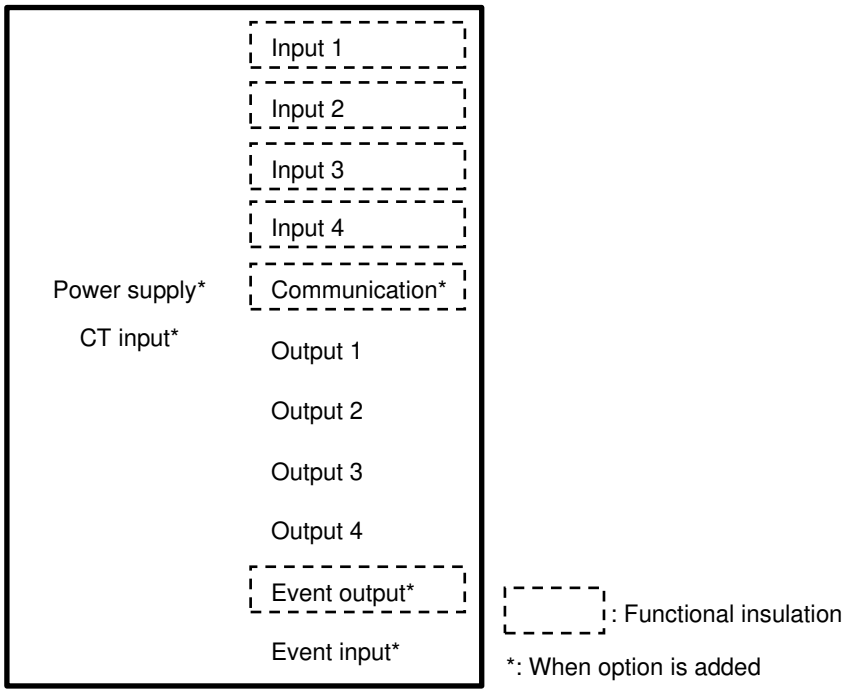
Insulation resistance	500 V DC 10 MΩ or more
Dielectric strength	Between Power terminal – Ground (GND): 1.5 kV AC for 1 minute Between Power terminal – Ground (GND): 1.5 kV AC for 1 minute Between Input terminal – Power terminal: 750 V AC for 1 minute

Recommended Environment

Ambient temperature	-10 to 55 °C (no condensation or freezing)
Ambient humidity	35 to 85 %RH (no condensation)
Environmental specification	RoHS directive compliant (RoHS2)

Performance

<table>
<tr><td>Base accuracy</td><td>When the ambient temperature is 23 °C and the mounting angle is ±5 degrees
<table>
<tr><td>Thermocouple input</td><td>Within ±0.2% of each input span
Within 0 °C, within ±0.4% of each input span
R, S input, 0 to 200 °C (32 to 392 °F): Within ±6 °C (12 °F)
B input, 0 to 300 °C (32 to 572 °F): Accuracy is not guaranteed.</td></tr>
<tr><td>RTD input</td><td>Within ±0.1% of each input span</td></tr>
<tr><td>DC current input
DC voltage input</td><td>Within ±0.2% of each input span</td></tr>
</table></td></tr>
<tr><td>Cold junction compensation accuracy</td><td>Within ±1 °C at -10 to 55 °C</td></tr>
<tr><td>Effect of ambient temperature</td><td>
<table>
<tr><td>Thermocouple input</td><td>Within ±100 ppm/°C of each input span
Less than 0 °C: Within ±200 ppm/°C of each input span</td></tr>
<tr><td>RTD input</td><td>Within ±200 ppm/°C of each input span
Less than 0 °C: Within ±400 ppm/°C of each input span</td></tr>
<tr><td>DC current input
DC voltage input</td><td>Within ±100 ppm/°C of each input span</td></tr>
</table></td></tr>
<tr><td>Effect of electromagnetic interference</td><td>Within ±1 % of each input span</td></tr>
<tr><td>Input sampling period</td><td>20 ms (only DC current input and DC voltage input are valid)
50 ms (only DC current input and DC voltage input are valid)
125 ms
For thermocouple input and RTD input, fixed to 125 ms</td></tr>
</table>

General Structure

Weight	Approx. 170 g
External dimensions	30 × 100 × 85 mm (W × H × D excluding protrusion) 95 mm depth when the terminal cover is attached
Mounting type	DIN rail mounting type
Case	Flame-resistant resin, Color: Black
Panel	Membrane sheet
Applicable standard	<table><tr><td>EN</td><td>EN61010-1 (Pollution degree 2, overvoltage category II)</td></tr><tr><td>EC Directive</td><td>EMI: EN61326 Radiated interference field strength: EN55011 Group1 ClassA Terminal noise voltage: EN55011 Group1 ClassA EMS: EN61326</td></tr></table> Triac output specifications do not apply to each standard

Setting Structure

Communication specification selection	Select the communication speed, data bit, parity, stop bit, and communication protocol using the DIP switch.
Module address selection	Select the module address 0 to F (1 to 16) with the rotary switch. The value obtained by adding 1 to the value of the selected rotary switch becomes the module address.

Control Performance

Control action selection	Select any control method from 2 DOF PID control, Fast-PID control, Slow-PID control, ON-OFF control or Gap-PID control. Optimal control is possible by selecting the control type according to the intended use and process. The control action selection can be selected only when control prohibited. When the integral time is set to 0 or 0.0, Slow-PID control cannot be selected.
2 DOF PID control	Control type that achieves both tracking characteristics when changing SV and suppression of disturbance.

Proportional band (P)	1 to Input span °C (°F) or 0.1 to Input span °C (°F) when DC current and DC voltage input 0.10 to 100.00 %
Integral time (I)	0 to 3600 seconds or 0.0 to 2000.0 seconds The setting range varies depending on the integral/derivative decimal point position selection.
Derivative time (D)	0 to 3600 seconds or 0.0 to 2000.0 seconds The setting range varies depending on the integral/derivative decimal point position selection.
Proportional gain 2 DOF coefficient (α)	0.00 to 1.00
Integral 2 DOF coefficient (β)	0.00 to 10.00
Derivative 2 DOF coefficient (γ, Cd)	0.00 to 1.00
Proportional cycle	0.1 to 100.0 seconds
Output high limit, Output low limit	0.0 to 100.0 % when DC current output -5.0 to 105.0 %

	Fast-PID control	Derivative leading PID control type, a general control type in which the derivative operation operates according to the PV change amount • P control: When the integral time and derivative time are set to 0 • PI control: When the derivative time is set to 0 • PD control: When the integral time is set to 0 • Deviation PID control: When changing the SV with time, setting the Proportional gain 2 DOF coefficient (α) to 1.00 and the Derivative 2 DOF coefficient (γ, Cd) to 1.00 causes the differential action to operate according to the deviation.

Proportional band (P)	1 to Input span °C (°F) or 0.1 to Input span °C (°F) when DC current and DC voltage input 0.10 to 100.00 %
Integral time (I)	0 to 3600 seconds or 0.0 to 2000.0 seconds The setting range varies depending on the integral/derivative decimal point position selection.
Derivative time (D)	0 to 3600 seconds or 0.0 to 2000.0 seconds The setting range varies depending on the integral/derivative decimal point position selection.
Proportional gain 2 DOF coefficient (α)	0.00 to 1.00
Integral 2 DOF coefficient (β)	0.00 to 10.00
Derivative 2 DOF coefficient (γ, Cd)	0.00 to 1.00
Proportional cycle	0.1 to 100.0 seconds
Output high limit, Output low limit	0.0 to 100.0 % when DC current output -5.0 to 105.0 %

<table>
<tr><td></td><td>Slow-PID conrol</td><td>Proportional derivative PID control type, in which proportional operation operates according to PV and derivative operation operates according to PV change amount
<table>
<tr><td>Proportional band (P)</td><td>1 to Input span °C (°F) or
0.1 to Input span °C (°F)
when DC current and DC voltage input
0.10 to 100.00 %</td></tr>
<tr><td>Integral time (I)</td><td>0 to 3600 seconds or
0.0 to 2000.0 seconds
The setting range varies depending on the integral/derivative decimal point position selection.</td></tr>
<tr><td>Derivative time (D)</td><td>0 to 3600 seconds or
0.0 to 2000.0 seconds
The setting range varies depending on the integral/derivative decimal point position selection.</td></tr>
<tr><td>Proportional gain 2 DOF coefficient (α)</td><td>0.00 to 1.00</td></tr>
<tr><td>Integral 2 DOF coefficient (β)</td><td>0.00 to 10.00</td></tr>
<tr><td>Derivative 2 DOF coefficient (γ, Cd)</td><td>0.00 to 1.00</td></tr>
<tr><td>Proportional cycle</td><td>0.1 to 100.0 seconds</td></tr>
<tr><td>Output high limit,
Output low limit</td><td>0.0 to 100.0 %
when DC current output
-5.0 to 105.0 %</td></tr>
</table></td></tr>
<tr><td></td><td>ON-OFF control</td><td>Control type that operates with only two values, ON and OFF
<table>
<tr><td>ON/OFF hysteresis</td><td>0.1 to 1000.0 °C (0.1 to 1800.0 °F)
when DC current and DC voltage input
1 to 10000</td></tr>
</table></td></tr>
</table>

	Gap-PID control	If the PV is noisy or if the operating part has hysteresis, a slight fluctuation may continue near the deviation of zero. In such a case, the dead zone is normally used, but since control is not performed within the dead zone, PV changes during disturbance. Therefore, it is a control method that gives deviation characteristics within the dead zone and responds to disturbance.

Proportional band(P)	1 to Input span °C (°F) or 0.1 to Input span °C (°F) when DC current and DC voltage input 0.10 to 100.00 %
Integral time (I)	0 to 3600 seconds or 0.0 to 2000.0 seconds The setting range varies depending on the integral/derivative decimal point position selection.
Derivative time (D)	0 to 3600 seconds or 0.0 to 2000.0 seconds The setting range varies depending on the integral/derivative decimal point position selection.
Proportional gain 2 DOF coefficient (α)	0.00 to 1.00
Integral 2 DOF coefficient (β)	0.00 to 10.00
Derivative 2 DOF coefficient (γ, Cd)	0.00 to 1.00
Proportional cycle	0.1 to 100.0 seconds
Output high limit, Output low limit	0.0 to 100.0 % when DC current output -5.0 to 105.0 %
Gap width	0.0 to 10.0 % Proportional band × Gap width
Gap coefficient	0.0 to 1.0

Control range	When the control range below is exceeded, the control output is turned off. Control range for thermocouple input (no decimal point) Input range low limit -50 °C (90 °F) to Input range high limit +50 °C (90 °F) Control range for thermocouple input (with decimal point) and RTD input Input range low limit -(Input span × 1 %) °C (°F) to Input range high limit +50.0 °C (90.0 °F) Control range for DC current and DC voltage input Scaling low limit –Scaling width × 1 % to Scaling high limit + Scaling width × 10 %

Standard Function

<table>
<tr><td>Alarm output</td><td>When the deviation is set to ± of SV (excluding the process alarm), the alarm output turns ON or OFF (high/low limit range alarm) when PV exceeds the range.
High limit alarm, Low limit alarm, High/Low limits alarm, High/Low limits range, Process High alarm, Process Low alarm, High limit with standby, Low limit with standby, High/Low limits alarm with standby, High/Low limits alarm individually, High/Low limit s range alarm individually, High/Low limits alarm with standby individually, or No action.
Refer to “14.5.3 Alarm Operation Diagram (14-31)” for detail of alarm action.
<table>
<tr><td>Action</td><td>ON/OFF action</td></tr>
<tr><td>Alarm hysteresis</td><td>0.1 to 1000.0 °C (0.1 to 1800.0°F)
when DC current and DC voltage input
1 to 10000</td></tr>
<tr><td>Output</td><td>Event output allocated by status flag or event output allocation selection</td></tr>
<tr><td>Alarm setting 0 Enabled/Disabled selection</td><td>When Enabled is selected in Alarm setting 0 Enabled/Disabled selection, High limit alarm, Low limit alarm, High/Low limits alarm, High/Low limits range, Process High alarm, Process Low alarm, High limit with standby, Low limit with standby, High/Low limits alarm with standby, High/Low limits alarm individually, High/Low limit s range alarm individually, High/Low limits alarm with standby individually, the alarm action will work even if the alarm action setting value is set to 0.</td></tr>
</table></td></tr>
<tr><td>Loop break alarm</td><td>Detects actuator trouble (heater burnout, sensor burnout).
<table>
<tr><td>Loop break alarm time</td><td>0 to 200 minutes</td></tr>
<tr><td>Loop break alarm band</td><td>0 to 150 °C (0 to 270 °F) or
0.0 to 150.0 °C (0.0 to 270.0 °F)
when DC current and DC voltage input
0 to 1500</td></tr>
<tr><td>Output</td><td>Event output allocated by status flag or event output allocation selection</td></tr>
</table></td></tr>
</table>

<table>
<tr><td>Setting value ramp function</td><td>When the SV is changed, control is performed from the SV before the change to the SV after the change at the set change rate.
When the power is turned on, control is performed at the set rate of change from PV to SV at that time.
<table>
<tr><td>SV increase rate</td><td>0 to 10000 °C/min. (0 to 18000 °F/min.) or
0.0 to 1000.0 °C /min. (0.0 to 1800.0 °F/min.)
when DC current and DC voltage input
0 to 10000/min.</td></tr>
<tr><td>SV decrease rate</td><td>0 to 10000 °C/min. (0 to 18000 °F/min.) or
0.0 to 1000.0 °C /min. (0.0 to 1800.0 °F/min.)
when DC current and DC voltage input
0 to 10000/min.</td></tr>
</table></td></tr>
<tr><td>Resore action selection when power is turn on</td><td>When the power is turned on, select whether to resume in the continuous state (state before turning off the power) or in the stopped state.</td></tr>
<tr><td>Non-volatile IC memory save selection</td><td>Select whether to allow or prohibit saving data to the non-volatile IC memory.
If you select save prohibition, can temporarily change all the set values, but if turn the power off and then on, it will return to the value before selecting save prohibition.</td></tr>
<tr><td>Auto/Manual selection</td><td>Select automatic or manual control.
When switching from automatic control to manual control or from manual control to automatic control, the balanceless bumpless function works to prevent sudden changes in MV.
When the power is turned on again during the manual control, it will be restored by the automatic control.
Manual control MV setting range
-5.0 to 105.0 %</td></tr>
<tr><td>Sensor correction coefficient setting</td><td>Set the slope of the sensor input value.
0.000 to 10.000</td></tr>
<tr><td>Sensor correction setting</td><td>et the sensor correction value.
If the temperature at the control location and the temperature at the sensor installation location are different, PV is shifted and corrected. However, it is valid within the input rated range regardless of the sensor correction value.
-100.0 to 100.0 °C (-180.0 to 180.0 °F)
when DC current and DC voltage input, -1000 to 1000</td></tr>
<tr><td>Control function selection</td><td>Select from standard, heating/cooling control, cascade control or output selection function.</td></tr>
</table>

Heating/Cooling control		If it is difficult to control the temperature of the controlled object only by heating control, control is performed in combination with cooling control. When heating/cooling control is selected for CH1 in control function selection, CH1 becomes heating output and CH2 becomes cooling output. When heating/cooling control is selected for CH3 in control function selection, CH3 becomes heating output and CH4 becomes cooling output.
	2 DOF PID control	

Cooling proportional band (Pc)	0 to Input span °C (°F) or 0.0 to Input span °C (°F) when DC current and DC voltage input 0.00 to 100.00 %
Cooling Integral time (Ic)	0 to 3600 seconds or 0.0 to 2000.0 seconds The setting range varies depending on the integral/derivative decimal point position selection.
Cooling derivative time (Dc)	0 to 3600 seconds or 0.0 to 2000.0 seconds The setting range varies depending on the integral/derivative decimal point position selection.
Cooling proportional cycle	0.1 to 100.0 seconds
Cooling output high limit, Cooling output low limit	0.0 to 100.0 % when DC current output -5.0 to 105.0 %

	Fast-PID control	
		Cooling proportional band (Pc): 0 to Input span °C (°F) or 0.0 to Input span °C (°F) when DC current and DC voltage input 0.00 to 100.00 %
		Cooling Integral time (Ic): 0 to 3600 seconds or 0.0 to 2000.0 seconds The setting range varies depending on the integral/derivative decimal point position selection.
		Cooling derivative time (Dc): 0 to 3600 seconds or 0.0 to 2000.0 seconds The setting range varies depending on the integral/derivative decimal point position selection.
		Cooling proportional cycle: 0.1 to 100.0 seconds
		Cooling output high limit, Cooling output low limit: 0.0 to 100.0 % when DC current output -5.0 to 105.0 %
	Slow-PID control	
		Cooling proportional band (Pc): 0 to Input span °C (°F) or 0.0 to Input span °C (°F) when DC current and DC voltage input 0.00 to 100.00 %
		Cooling Integral time (Ic): 0 to 3600 seconds or 0.0 to 2000.0 seconds The setting range varies depending on the integral/derivative decimal point position selection.
		Cooling derivative time (Dc): 0 to 3600 seconds or 0.0 to 2000.0 seconds The setting range varies depending on the integral/derivative decimal point position selection.
		Cooling proportional cycle: 0.1 to 100.0 seconds
		Cooling output high limit, Cooling output low limit: 0.0 to 100.0 % when DC current output -5.0 to 105.0 %
	ON-OFF control	
		Cooling ON/OFF hysteresis: 0.1 to 1000.0 °C (0.1 to 1800.0 °F) when DC current and DC voltage input 1 to 10000

<table>
<tr><td></td><td>Cooling control parameters</td><td>
<table>
<tr><td>Overlap/dead band</td><td>-100.0 to 100.0 °C (-180.0 to 180.0 °F)
when DC current and DC voltage input
-1000 to 1000 %</td></tr>
<tr><td>Cooling action mode selection</td><td>Air cooling (Linear characteristics)
Oil cooling (1.5th power of the linear characteristics)
Water cooling (2nd power of the linear characteristics)</td></tr>
</table>
</td></tr>
<tr><td colspan="2">Cascade control</td><td>The MV on the master side obtained from the SV on the master side (CH1 or CH3) and PV is substituted for the SV on the slave side (CH2 or CH4), and control calculation is performed on the slave side and control is performed on the MV on the slave side.
When cascade control is selected for CH1, CH1 becomes the master and CH2 becomes the slave.
When cascade control is selected for CH3, CH3 becomes the master and CH4 becomes the slave.</td></tr>
<tr><td colspan="2">Output selection function</td><td>If the used channel fails, you can change the input to an unused channel and select the output location for the input.
Select the input channel for the output of each channel.
Selection item: CH1 to CH4</td></tr>
<tr><td colspan="2">Output gain-bias function</td><td>When controlling the temperature of a metal plate, heater control is performed at multiple locations. When using multiple outputs for inputs, if the distribution of output amounts is known in advance, the ratio to MV (reference output) And the bias is set to control evenly.
<table>
<tr><td>Output gain</td><td>0.00 to 10.00 times</td></tr>
<tr><td>Output bias</td><td>0.0 to 100.0 %</td></tr>
</table>
</td></tr>
</table>

<table>
<tr><td>Input math function</td><td>Select Standard, Difference input or Addition input.
The input math function selected for CH1 corresponds to CH1 and CH2, and the input math function selected for CH3 corresponds to CH3 and CH4.
However, if heating/cooling control, cascade control or output selection function is selected for control function selection, the input math function is invalid.
<table>
<tr><td>Standard</td><td>The input value of CH is used as PV for control.</td></tr>
<tr><td>Difference input</td><td>The temperature difference between CH1 and CH2 is used as the PV for CH1 and is controlled by CH1.
CH1 PV = CH1 PV - CH2 PV
The temperature difference between CH3 and CH4 is used as the PV for CH3 and is controlled by CH3.
CH3 PV = CH3 PV - CH4 PV
Each setting value such as scaling and PV filter time constant can be set for each channel.
When performing AT with the differece input specifications, execute AT individually for each channel and then select differece input.</td></tr>
<tr><td>Addition input</td><td>The added value of CH1 and CH2 is used as the PV for CH1 and is controlled by CH1.
CH1 PV = CH1 PV + CH2 PV
The added value of CH3 and CH4 is used as the PV for CH3 and is controlled by CH3.
CH3 PV = CH3 PV + CH4 PV
Each setting value such as scaling and PV filter time constant can be set for each channel.
When performing AT with the addition input specifications, execute AT individually for each channel and then select addition input.</td></tr>
</table></td></tr>
<tr><td>Input difference function</td><td>The input difference selection detects the input difference between the local channel and the selected channel, and when the input difference setting exceeds the set value, the input difference flag is set to 1. However, this function does not work when you select your own channel with input difference selection.</td></tr>
<tr><td>Scaling function</td><td>The scaling low limit to the scaling high limit can be set arbitrarily within the input range.
For thermocouple input and RTD input, this serves as the SV low limit to SV high limit .
When the scaling high limit and scaling low limit are set to the same value, the control output turns OFF.</td></tr>
</table>

Extension function selection	Select No function or Auto balance control function.
Auto balance control function	This function suppresses partial burning and mechanical strain by performing soaking on one control target at multiple control points. When using the communication expansion module QMC1, QMC1 becomes the master and transfers data between control modules. When the communication expansion module QMC1 is not used, the control module QTC1-4P (with power supply / communication option) becomes the master, and the master channel and slave channel are selected from the master input channel by auto balance control master/slave selection. The auto balance control function does not work when the master channel is not selected. When Enabled is selected for Auto balance control Enabled/Disabled selection, control prohibited is changed to control allowed to start auto balance control. The slave channels that are allowed to control within 10 seconds from the master channel on which autobalance control was started are the target channels for autobalance control. Slave channels that have been allowed to control after 10 seconds have passed (during automatic balance control operation) are excluded from normal operation and are controlled normally. When the auto balance control function operates, the SV of the slave channel heats up according to the PV of the master channel. If the master channel has an input error, cancel the auto balance control function. Slave channels that have no input error are individually controlled normally. The set value ramp function is disabled during auto balance control. It is also invalid when 2 DOF PID control, Fast-PID control, ON-OFF control or Gap-PID control is selected in control action selection. When using the auto balance control function, the same input range is used for the inputs that are used for auto balance control. For DC current input and DC voltage input, set the scaling high limit and scaling low limit to the same setting. Slave channel SV of auto balance control Slave channel SV of auto balance control = Master channel PV + (Slave channel SV - Master channel SV)
Auto balance control interlock/alone selection	Select whether to use the auto balance control function with interlock or alone. When interlock is selected, automatic balance control is possible between modules including the master module. However, only one group can be used with interlock. When alone is selected, auto balance control is possible only within the module.

	Auto balance control start output setting	When using the auto balance control function, the target value of the master channel is SV, but since the SV of the slave channel becomes the PV of the master channel, the slave channel does not start the auto balance control unless the master channel heats up. As a result, the temperature rise of the slave channel is delayed, a temperature difference with the master channel is generated, and in order to prevent the simultaneity from being deteriorated, the MV is set so that the output of the slave channel turns on at the start of the auto balance control. 0.00 to 1.00 (corresponds to 0 to 100%)
	Auto balance control start condition	The auto balance control is started in the following cases. • When input is not burnout or underscale • When AT Cancel is selected in AT Perform/Cancel • When master is selected in master/slave selection • When Reverse action is selected in Direct/Reverse action selection • When the heater burnout alarm or loop break alarm is not generated
	Auto balance control release range setting	The auto balance control is canceled in the following cases. • When input is not burnout or underscale • When AT Perform is selected in AT Perform/Cancel • When Direct action is selected in Direct/Reverse action selection • When a Heater burnout alarm or Loop break alarm occurs on the master channel. However, if a Heater burnout alarm or Loop break alarm occurs on a slave channel, the auto balance control is canceled only for that channel. • When Control Prohibited is selected in Control Enable/Prohibited selection
	Auto balance control release area setting	When the PV of the master channel reaches the autobalance control release area and when the PV of each slave channel reaches the autobalance control release area, the auto balance control function is released. Master channel PV ≧ Master channel SV - Auto balance control release area (When 0 is set, the auto balance control release area is twice the proportional band of the master channel.) Slave channel PV ≧ Slave channel SV - Auto balance control release area (When 0 is set, the auto balance control release area is twice the proportional band of the master channel.)
	Number of communication management module setting	Set the number of modules managed by the master module when using the SIF function or auto balance control function. 1 to 16 modules

Attached Function

Power failure countermeasure	The setting data is backed up in the non-volatile IC memory.
Self-diagnosis	The CPU is monitored by a watchdog timer, and if an abnormal status occurs, the controller is switched to warm-up status, turning all outputs OFF.
Automatic cold junction temperature compensation	Detect the temperature of the connection terminal between the thermocouple and the instrument, and make it the same as if the reference contact is always set to 0 °C (32 °F). (Only valid for channels for which thermocouple input is selected.)
PV filter time constant	The fluctuation of PV due to noise is reduced by the digital first-order low-pass filter.
Number of moving average setting	Stabilizes the indicated value by averaging the values that PV changes due to noise.
CH Enable/Disable selection	Select enable or disable for each channel. When disabled is selected, all operations are disabled for the selected channel and PV becomes 0.
Overscale	In the case of the following input range, overscale will occur and B1: Input error (overscale) of status flag 1 will be set to "1: Error". However, control continues during overscale. For thermocouple input (no decimal point) Rated high limit to Input range high limit 50 °C (90 °F) For thermocouple input (with decimal point) and RTD input Rated high limit to Input range h igh limit 50.0 °C (90.0 °F) For DC current input and DC voltage input Scaling high limit to Scaling high limit Scaling width × 1 0 %
Underscale	In the case of the following input range, under scale will occur and B 5 : Input error under scale) of status f lag 1 will be set to "1: Error". However, control continues during under scale. For thermocouple input (no decimal point) Input range low limit 50 °C (90 °F) to Rated low limit For thermocouple input (with decimal point) and RTD input Input range low limi t Input span × 1 % °C (°F) to Rated low limit For DC current input and DC voltage input Scaling low limit Scaling width × 1 to Scaling low limit

Sensor Error	In the case of the following, a sensor error will occur, B5: sensor error of status flag 2 will be set to "1: error", and the control output will be turned off. Sensor error condition for thermocouple input (no decimal point) When the input range low limit is less than 50 °C (90 °F) and exceeds the input range high limit +50 °C (90 °F). At this time, PV is fixed to the of input range low limit 50 °C (90 °F) 1 digit and the input range high limit +50 °C (90 °F)+1 digit. Sensor error condition for thermocouple input (with decimal point) and RTD input When the input range low limit is less than 50 °C (90 °F) and exceeds the input range high limit +50 °C (90 °F) At this time, PV is fixed to the of input range low limit 50 °C (90 °F) 1 digit and the input range high limit +50 °C (90 °F)+1 digit. Sensor error condition for DC current input and DC voltage input When 4 to 2 0 mA DC and 1 to 5 V DC Scaling low limit -Scaling width × 1% or less At this time, PV is fixed to Scaling lower limit Scaling width × 1% 1 digit. When 0 to 1 V DC Scaling high limit Scaling width × 10 or more At this time, P V is fixed Scaling high limit scaling width × 1% + 1 digit. When 0 to 2 0 mA DC , 0 to 5 V DC and 0 to 1 0 V DC Value at 0 mA DC or 0 V DC input
Cold junction error	If the internal cold junction temperature is less than -10 °C or more than 55 °C, a cold junction error will occur (Valid only for channels for which thermocouple input is selected)
ADC error	If there is an abnormality such as a failure in the internal circuit, the channel in which the error occurred is turned off. At this time, PV becomes 32767.
Warm up indication	The power indicator flashes every 500 ms for about 3 seconds after the power is turned on.
Contact switching total number of times	The control output ON/OFF count can be integrated and measured. ON/OFF is set as one time and totaling is performed. This allows you to grasp the approximate contact life as the number of switching times of the switch used externally. However, since the saving cycle is 1 hour, the number of times within 1 hour may not be saved due to a power failure.
Total energizing time	It can check the time that the power is on. The accumulated time is saved every 10 minutes. It can grasp the approximate usage time from the accumulated time. However, since the save cycle is 10 minutes, the time within 10 minutes may not be saved due to a power failure. Total energizing time: 10 minutes/count

<table>
<tr><td>Heater accumulated energizing time</td><td>For relay contact output or non-contact voltage output, you can check the cumulative time the heater is energized.
When the output time to the heater reaches 1 minute cumulatively, the count is added.
The accumulated time is saved every 10 minutes.
The accumulated time can be used to understand the approximate usage period of the heater, which can be used as a guide for replacing the heater.
However, since the save cycle is 10 minutes, the time within 10 minutes may not be saved due to a power failure.
Cumulative heater energization time: 1 minute/count</td></tr>
<tr><td>Error history</td><td>When an error occurs, the bit ON/OFF and accumulated energization time are saved for the past 10 times.
Error history exists for each channel, and device common errors are saved in the error history of all channels.
Total energizing time: 1 hour/count
<table>
<tr><th>Bit</th><th colspan="3">Error content</th></tr>
<tr><td>B0</td><td>Alarm 1</td><td>0: Normal</td><td>1: Error</td></tr>
<tr><td>B1</td><td>Alarm 2</td><td>0: Normal</td><td>1: Error</td></tr>
<tr><td>B2</td><td>Alarm 3</td><td>0: Normal</td><td>1: Error</td></tr>
<tr><td>B3</td><td>Alarm 4</td><td>0: Normal</td><td>1: Error</td></tr>
<tr><td>B4</td><td>Heater burnout alarm</td><td>0: Normal</td><td>1: Error</td></tr>
<tr><td>B5</td><td>Undefined</td><td></td><td></td></tr>
<tr><td>B6</td><td>Loop break alarm</td><td>0: Normal</td><td>1: Error</td></tr>
<tr><td>B7</td><td>Sensor error</td><td>0: Normal</td><td>1: Error</td></tr>
<tr><td>B8</td><td>Input error (Overscale)</td><td>0: Normal</td><td>1: Error</td></tr>
<tr><td>B9</td><td>Input error (Underscale)</td><td>0: Normal</td><td>1: Error</td></tr>
<tr><td>B10</td><td>Cold junction error</td><td>0: Normal</td><td>1: Error</td></tr>
<tr><td>B11</td><td>Non-volatile IC memory error</td><td>0: Normal</td><td>1: Error</td></tr>
<tr><td>B12</td><td>ADC error</td><td>0: Normal</td><td>1: Error</td></tr>
<tr><td>B13</td><td>Undefined</td><td></td><td></td></tr>
<tr><td>B14</td><td>Undefined</td><td></td><td></td></tr>
<tr><td>B15</td><td>Undefined</td><td></td><td></td></tr>
</table></td></tr>
</table>

<table>
<tr><td>Console communication</td><td>Connect a communication cable (commercial item) to the console communication connector, and
The following operations can be performed from an external computer using the software (SWC-QTC101M).
(1) Reading and setting of SV, PID and various set values
(2) PV and operation status reading
(3) Change of function
<table><tr><td>Communication protocol</td><td>MODBUS RTU</td></tr><tr><td>Communication cable</td><td>USB - micro USB Type-B(commercial item)</td></tr><tr><td>Software</td><td>Console software (SWC-QTC101M)</td></tr></table></td></tr>
<tr><td>Firmware update function</td><td>Connect a communication cable (commercial item) to the console communication connector, and software (SWC-QTC101M) to change the function from an external computer.</td></tr>
</table>

Other Item

Accessories	Instruction manual (Abridged edition): 1 Line cap: 1 Power supply terminal cover: 1 (Included when adding power supply/communication option)
Sold separately	Receiving resistor: RES-S01-050 50 Ω Front terminal cover: TC-QTC CT: CTL-6-S-H (For heater burnout alarm 20 A) CTL-12-S36-10L1U (For heater burnout alarm 100 A) Connector harness for heater burnout alarm: WQ Connector harness for event input/output: EVQ

16.2 Optional Specifications

<table>
<tr><td>Power sppuly and Communication</td><td>
Perform the following operations from the external computer.
(1) Reading and setting of SV, PID and various set values
(2) PV and operation status reading
(3) Change of function
<table>
<tr><td>Communication line</td><td>EIA RS-485 (C5 option)</td></tr>
<tr><td>Communication method</td><td>Half-duplex communication</td></tr>
<tr><td>Synchronization method</td><td>Start-stop synchronization</td></tr>
<tr><td>Communication protocol</td><td>MODBUS RTU or SIF specifications can be selected by DIP switch</td></tr>
<tr><td>Communication speed</td><td>9600 bps, 19200 bps, 38400 bps or 57600 bps can be selected by DIP switch</td></tr>
<tr><td>Data bit/Parity/Stop bit</td><td>Select the following with the DIP switch
Data bit: 8
Parity: Even, Odd, No parity
Stop bit: 1 or 2</td></tr>
<tr><td>Communication response delay time</td><td>Set the delay time to return the response from the module after receiving the command from the host.
0 to 1000 ms</td></tr>
</table>
</td></tr>
<tr><td></td><td>
The SIF function (Smart InterFace, programless communication function) the PLC Q series manufactured by Mitsubishi Electric Corp. and this instrument , and reads and writes various data to and from PLC registers using the communication proto col of the PLC.
<table>
<tr><td>Communication protocol</td><td>Format 4</td></tr>
<tr><td>Communication command</td><td>A compatible 1C frame AnA/AnU common command (QR/QW)</td></tr>
</table>
Using the console software (SWC-QTC101M), select the PLC registe r start number, PLC register address, the monitoring items and setting items to be linked, and set the specifications.
The control module QTC1-4P becomes the master, and the selected monitor item is periodically written to the PLC register by using the QW command, and the value of the PLC register is constantly updated.
In addition, the selected setting items are read from the PLC register in response to a setting request using the QR command.
When the read data is changed, the set value of control module QTC1-4P or control module QTC1-40 is updated.
</td></tr>
</table>

<table>
<tr><td>Heater burnout alarm</td><td>The heater current is monitored by CT (sold separately) to detect heater burnout.
Cannot be added for Direct current output, DC voltage output and Triac output.
<table>
<tr><td>Rating</td><td>Single phase 20 A, Single phase 100 A</td></tr>
<tr><td>Setting range</td><td>0.0 to 20.0 A (Setting 0.0 will not work)
0.0 to 100.0 A (Setting 0.0 will not work)</td></tr>
<tr><td>Setting accuracy</td><td>±5 % of rated value</td></tr>
<tr><td>Operating point</td><td>Heater burnout alarm setting value</td></tr>
<tr><td>Action</td><td>ON/OFF action</td></tr>
<tr><td>Output</td><td>Event output allocation by status flag or event output allocation selection.</td></tr>
</table></td></tr>
<tr><td>Event input</td><td>Operates with the content selected in event input allocation selection.
<table>
<tr><th>Setting value</th><th>Action</th><th>Contents</th></tr>
<tr><td>0</td><td>No action</td><td>It can be used for any operation by reading the event input status flag. When the event input is turned off, the event input status flag is set to 0, and when the event input is turned on, the event input status flag is set to 1.</td></tr>
<tr><td>1</td><td>Control start/stop
(CH alone)</td><td>For the selected channel only, control will start when the event input turns ON, and control will stop when the event input turns OFF.</td></tr>
<tr><td>2</td><td>Control start/stop
(CH interlock)</td><td>For all channels, turning on the event input starts the control, and turning off the event input stops the control.</td></tr>
</table></td></tr>
<tr><td>Event output</td><td>Operates with the content selected in event output allocation selection.
<table>
<tr><th>Setting value</th><th>Action</th><th>Contents</th></tr>
<tr><td>0</td><td>No action</td><td>Any value can be output by setting a value in the event output status flag from the host.
Setting the event output st atus flag to 0 turns off the event output, and setting it to 1 turns on the event output.</td></tr>
<tr><td>1</td><td>Control start/stop
(CH alone)</td><td>The event output turns ON when any of the selected channel's alarm, heater burnout alarm, or loop error alarm is activated.</td></tr>
<tr><td>2</td><td>Control start/stop
(CH interlock)</td><td>The event output turns on when an alarm, heater burnout alarm, or loop error alarm occurs on all channels.</td></tr>
</table></td></tr>
</table>

17 Troubleshooting

If any malfunctions occur, refer to the following items after checking that power is being supplied to the master module and slave module.

17.1 Communication

Problem	Possible Cause	Solution
Cannot communicate.	Is the communication cable disconnected?	Check the communication cable.
	Is the communication cable wiring correct?	Refer to “7 Wiring (7-1 to 7-9)” or “13.4 Wiring (13-8 to 13-13)”, and check the communication cable.
	Is there any disconnection or contact failure of the communication cable?	Check the communication cable.
	Is communication speed of the master and slave same?	Refer to “5.1.1 Selection of Communication Specifications (5-1, 5-2)”, and check the communication speed of the master and slave.
	Are data bits, parity, and stop bits of the master and slave same?	Refer to “5.1.1 Selection of Communication Specifications (5-1, 5-2)”, and check the data bit, parity, and stop bit of the master and slave.
	Is the module address of the command and slave same?	Refer to “5.1.2 Selection of Module Address (5-3)”, and check the module address of the command and slave.
	Are there any slaves that have the same module address?	Refer to “5.1.2 Selection of Module Address (5-3)”, and check the module address.
	Is the program considering the transmission timing?	Refer to “9. Communication Procedure (9-1)”, and check the program.
Communication is possible, but a negative acknowledgement is returned.	Are sending a command code that does not exist?	Refer to “11.1 Communication Command List (11-1 to 11-20)”, and check the command code.
	Is the data of the write command exceeding the setting range?	Refer to “11.1 Communication Command List (11-1 to 11-20)”, and check the setting range of write command.
	Is it not possible to write (During AT execution)?	Check the state of a slave.

17.2 PV Reading Value

Problem	Possible Cause	Solution
PV reading is abnormal or unstable.	Are the sensor input and temperature unit (°C/°F) selection correct?	Select the correct sensor input and temperature unit (°C/°F).
	Is the sensor correction coefficient or sensor correction value set appropriately?	Set an appropriate sensor correction coefficient or sensor correction value.
	Are the sensor specifications correct?	Use a sensor with appropriate specifications.
	Is AC leaking to the sensor?	Make the sensor non-grounded.
	Is there a device nearby that causes inductive interference or noise?	Keep away from device that may cause inductive interference or noise.

17.3 Status Flag 1

Problem	Possible Cause	Solution
"1: Error" is set in B4: Input error (Overscale).	It is an overscale. Is PV over the input range high limit (scaling high limit for DC current input and DC voltage input)?	Check the input signal source is normal.
"1: Error" is set in B5: Input error (Underscale).	It is an underscale. Is PV below the input range low limit (scaling low limit for DC current input and DC voltage input)?	Check the input terminal wiring and input signal source are normal.
"1: Error" is set in B15: Non-volatile IC memory error.	The nonvolatile IC memory is defective.	Contact our agency or us.

17.4 Status Flag 2

Problem	Possible Cause	Solution
"1: Error" is set in B4: Cold juction error.	It is a cold juction error. If the internal cold junction temperature is lower than -10 °C or higher than 55 °C, a cold juction error will occur.	Check the installation environment such as the ambient temperature of the instrument.
"1: Error" is set in B5: Sensor error.	It is a sensor error. Is the sensor burn out?	Replace each sensor. How to check whether the sensor is burnt out • For thermocouple If the input terminals of this instrument are short-circuited and the around room temperature is indicated, this instrument is normal and the sensor may be burn out. • For RTD If a resistance of approx. 100 Ω is connected to the input terminal (between A and B) of this instrument and the input terminal (between B and B) is short-circuited and the temperature is indicated as 0 °C (32 °F), this instrument is normal and the sensor may be burn out. • For DC voltage (0 to 1 V DC) If the input terminals of this instrument are short-circuited and the scaling low limit is indicated, this instrument is normal and the sensor may be burn out. • For DC current (4 to 20 mA DC) If the input terminals of this instrument input 4 mA DC and the scaling low limit is indicated, this instrument is normal and the sensor may be burn out. • For DC voltage (1 to 5 V DC) If the input terminals of this instrument input 1 V DC and the scaling low limit is indicated, this instrument is normal and the sensor may be burn out.

"1: Error" is set in B5: Sensor error.	It is a sensor error. Is the sensor burn out?	• For DC current (0 to 20 mA DC) If the input terminals of this instrument input 4 mA DC and the input value is a value converted by scaling high and low limit settings, this instrument is normal and the sensor may be burn out. • For DC voltage (0 to 5 V DC, 0 to 10 V DC) If the input terminals of this instrument input 1 V DC and the input value is a value converted by scaling high and low limit settings, this instrument is normal and the sensor may be burn out.
"1: Error" is set in B6: ADC error.	It is the internal circuit error.	Contact our agency or us.

17.5 Control

Problem	Possible Cause	Solution
Control output does not turn on.	Is Prohibited selected in Control Allowed/Prohibited selection?	Select Prohibited in Control Allowed/Prohibited selection.
	Is the SV setting appropriate?	Set the appropriate SV.
The temperature does not rise.	Is the sensor broken?	Replace the sensor.
	Is the sensor or control output terminal securely attached to the input terminal of this instrument?	Attach the sensor or control output terminal to the input terminal of this instrument securely.
	Is the sensor or control output terminal wiring correct?	Wire correctly.
Control output remains ON.	Is the output low limit set to 100% or higher?	Set an appropriate value.
Control output remains OFF.	Is the output high limit set to 0% or less?	Set an appropriate value.
Chattering occurs with ON-OFF control.	Is the ON/OFF hysteresis setting too small?	Set an appropriate value.
Chattering occurs with PID control, PI control, PD control or P control.	Is the proportional cycle too small?	Set an appropriate value.

17.6 Loop Break Alarm

Problem	Possible Cause	Solution
The loop break alarm is activated even though the control terminal is normal.	Is the loop break alarm band setting too large for the loop break alarm time setting?	Set an appropriate loop break alarm band setting.
	Is the loop break alarm time setting too small for the loop break alarm band setting?	Set an appropriate loop break alarm time setting.

17.7 Heater Burnout Alarm

Problem	Possible Cause	Solution
Heater burnout alarm does not work.	Is the CT wiring correct?	Wire correctly.
	Is the control output turned ON?	The heater current value is updated when the control output is ON. Check the control parameter.
	Is the heater burnout alarm setting appropriate?	Set an appropriate heater burnout alarm setting. Set it to about 80% of the heater current value considering the fluctuation of the power supply voltage. If 0.0 is set, heater burnout alarm does not work.
Heater burnout alarm cannot be canceled.	Is the heater burnout alarm setting appropriate?	Set an appropriate heater burnout alarm setting. Set a value smaller than the heater current value when the control output is ON.
	After the heater burnout alarm is activated, is the control output turned ON and the heater current value updated?	The heater burnout alarm cannot be canceled unless the heater current value is updated to the normal value. Check the control parameter.

SHINKO TECHNOS CO., LTD.
OVERSEAS DIVISION

Head Office : 2-5-1, Senbahigashi, Minoo, Osaka, Japan
URL: http://www.shinko-technos.co.jp/e/ Tel : +81-72-727-6100
E-mail: overseas@shinko-technos.co.jp Fax: +81-72-727-7006

No. QTC12E3 2020.12