DIGITAL INDICATING CONTROLLERS

ACD-13A, ACR-13A

INSTRUCTION MANUAL

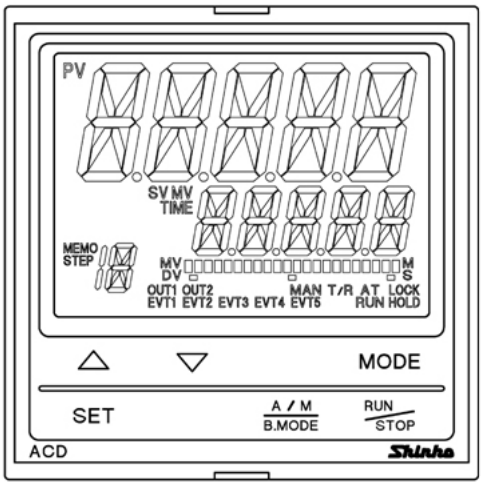

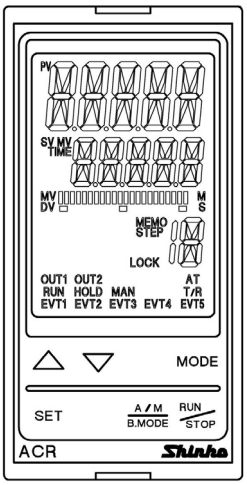

Shinko

Preface

Thank you for purchasing our Digital indicating controller ACD-13A or ACR-13A. This manual contains instructions for the mounting, functions, operations and notes when operating the ACD-13A or ACR-13A. To prevent accidents arising from the misuse of this controller, please ensure the operator receives this manual.

Notes

- This instrument should be used in accordance with the specifications described in the manual. If it is not used according to the specifications, it may malfunction or cause a fire.
- Be sure to follow the warnings, cautions and notices. If they are not observed, serious injury or malfunction may occur.
- Specifications of the instrument and the contents of this instruction manual are subject to change without notice.
- Care has been taken to ensure that the contents of this instruction manual are correct, but if there are any doubts, mistakes or questions, please inform our sales department.
- This instrument is designed to be installed through a control panel. If it is not, measures must be taken to ensure that the operator cannot touch power terminals or other high voltage sections.
- Any unauthorized transfer or copying of this document, in part or in whole, is prohibited.
- Shinko Technos Co., Ltd. is not liable for any damage or secondary damage(s) incurred as a result of using this product, including any indirect damage.

SAFETY PRECAUTIONS (Be sure to read these precautions before using our products.)

The safety precautions are classified into categories: “Warning” and “Caution”.
Depending on the circumstances, procedures indicated by ⚠ Caution may result in serious consequences, so be sure to follow the directions for usage.

⚠ Warning Procedures which may lead to dangerous conditions and cause death or serious injury, if not carried out properly.

⚠ Caution Procedures which may lead to dangerous conditions and cause superficial to medium injury or physical damage or may degrade or damage the product, if not carried out properly.

⚠ Warning

- To prevent an electrical shock or fire, only Shinko or other qualified service personnel may handle the inner assembly.
- To prevent an electrical shock, fire or damage to the instrument, parts replacement may only be undertaken by Shinko or other qualified service personnel.

⚠ Safety Precautions

- To ensure safe and correct use, thoroughly read and understand this manual before using this instrument.
- This instrument is intended to be used for industrial machinery, machine tools and measuring equipment. Verify correct usage after purpose-of-use consultation with our agency or main office. (Never use this instrument for medical purposes with which human lives are involved.)
- External protection devices, such as protective equipment used for excessive rises in temperature, must be installed, as malfunction of this product could result in serious damage to the system, or injury to personnel. Proper periodic maintenance is also required.
- This instrument must be used under the conditions and environment described in this manual. Shinko Technos Co., Ltd. does not accept liability for any injury, loss of life or damage occurring due to the instrument being used under conditions not otherwise stated in this manual.

⚠ Caution with Respect to Export Trade Control Ordinance

To avoid this instrument from being used as a component in, or as being utilized in the manufacture of weapons of mass destruction (i.e. military applications, military equipment, etc.), please investigate the end users and the final use of this instrument. In the case of resale, ensure that this instrument is not illegally exported.

1. Installation Precautions

⚠ Caution

This instrument is intended to be used under the following environmental conditions (IEC61010-1):
Overvoltage category Ⅱ, Pollution degree 2
Ensure the mounting location corresponds to the following conditions:

- A minimum of dust, and an absence of corrosive gases
- No flammable, explosive gases
- No mechanical vibrations or shocks
- No exposure to direct sunlight, an ambient temperature of 0 to 50℃ (32 to 122℉) that does not change rapidly, and no icing
- An ambient non-condensing humidity of 35 to 85 %RH
- No large capacity electromagnetic switches or cables through which large current is flowing.
- No water, oil or chemicals or where the vapors of these substances can come into direct contact with the unit
- Take note that the ambient temperature of this unit - not the ambient temperature of the control panel - must not exceed 50℃ (122℉) if mounted through the face of a control panel. Otherwise the life of the electronic components (especially electrolytic capacitors) may be shortened.

Note: Avoid setting this instrument directly on or near flammable material even though the case of this instrument is made of flame-resistant resin.

2. Wiring Precautions

⚠ Caution

- Do not leave wire remnants in the instrument, as they could cause a fire and/or malfunction.
- Use a solderless terminal with an insulation sleeve in which the M3 screw fits when wiring the instrument.
- The terminal block of this instrument is designed to be wired from the left side. The lead wire must be inserted from the left side of the terminal, and fastened with the terminal screw.
- Tighten the terminal screw using the specified torque. If excessive force is applied to the screw when tightening, the terminal screw or case may be damaged.
- This instrument does not have a built-in power switch, circuit breaker and fuse. Be sure to install a power switch, circuit breaker and fuse near the controller. (Recommended fuse: Time-lag fuse, rated voltage 250 V AC, rated current 2 A)
- For a 24 V AC/DC power source, do not confuse polarity when using direct current (DC).
- Do not apply a commercial power source to the sensor which is connected to the input terminal nor allow the power source to come into contact with the sensor.
- Use a thermocouple and compensating lead wire according to the sensor input specifications of this controller.
- Use the 3-wire RTD according to the sensor input specifications of this controller.
- For voltage input, (+) side input terminal number differs depending on its range as follows.
  (+) side input terminal number of 0 to 5 V DC, 1 to 5 V DC, 0 to 10 V DC: 16
  (+) side input terminal number of 0 to 10 mV DC, -10 to 10 mV DC, 0 to 50 mV DC, 0 to 100 mV DC, 0 to 1 V DC: 18
- When using a relay contact output type, externally use a relay according to the capacity of the load to protect the built-in relay contact.
- When wiring, keep input wires (thermocouple, RTD, etc.) away from AC sources or load wires.

3. Operation and Maintenance Precautions

⚠ Caution

- It is recommended that AT (auto-tuning) be performed during the trial run.
- Do not touch live terminals. This may cause electrical shock or problems in operation.
- Turn the power supply to the instrument OFF when retightening the terminal or cleaning.
  Working on or touching the terminal with the power switched ON may result in severe injury or death due to electrical shock.
- Use a soft, dry cloth when cleaning the instrument.
  (Alcohol based substances may tarnish or deface the unit.)
- As the display section is vulnerable, be careful not to put pressure on, scratch or strike it with a hard object.

Abbreviations used in this manual

Abbreviation	Term
PV	Process variable
SV	Desired value
MV	Output manipulated variable
DV	Deviation
AT	Auto-tuning
CT	Current transformer (for Heater burnout alarm option)

Characters used for this instrument and manual:

Indication	-1	0	1	2	3	4	5	6	7	8	9	C	F
Number, ℃/℉	-1	0	1	2	3	4	5	6	7	8	9	℃	℉
Indication	A	b	c	d	E	F	G	H	I	J	K	L	M
Alphabet	A	B	C	D	E	F	G	H	I	J	K	L	M
Indication	N	o	P	Q	R	S	T	U	V	W	X	Y	Z
Alphabet	N	O	P	Q	R	S	T	U	V	W	X	Y	Z

CONTENTS

1. Model

1.1 Model

ACD-1 3 A - □ / M □, □ □ □ ACR-1 3 A - □ / M □, □ □ □								ACD-13A (W96 x H96 x D100 mm) ACR-13A (W48 x H96 x D100 mm)
Control action	3							PID
Event output EVT1, EVT2		A						Selectable by front keypad (*1)
Control output (OUT1)			R					Relay contact: 1a1b
			S					Non-contact voltage (for SSR drive): 12 V DC±15%
			A					Direct current: 4 to 20 mA DC
Input				M				Multi-range (*2)
Power supply voltage								100 to 240 V AC (standard)
					1			24 V AC/DC (*3)
Options (Multiple options selectable)						EI		Event input
						A3		Event output (EVT1 to EVT3)
						A5		Event output (EVT4, EVT5)
						W	Single-phase	Heater burnout alarm (*4)
						W3	3-phase	
						DR	Relay contact: 1a	Heating/Cooling control output (OUT2)
						DS	Non-contact voltage (for SSR drive): 12 V DC±15%	
						DA	Direct current: 4 to 20 mA DC	
						C	RS-232C	Serial communication
						C5	RS-485	
						EA1	4 to 20 mA DC	External setting input
						EA2	0 to 20 mA DC	
						EV1	0 to 1 V DC	
						EV2	1 to 5 V DC	
						TA1	4 to 20 mA DC	Transmission output
						TV1	0 to 1 V DC	
						P	Insulated power output	

(*1) 13 types of alarm action (including No event) and Energized/De-energized, Timer output, Heater burnout alarm output option, Loop break alarm output, Time signal output, Output during AT or Pattern end output can be selected by front keypad.
(*2) An input type can be selected by front keypad from; Thermocouple, RTD, Direct current and Voltage.
(*3) Power supply voltage 100 to 240 V AC is standard. When ordering 24 V AC/DC, enter “1” after the input code.
(*4) The rated current 20 A and 100 A for single-phase and 3-phase can be selected by front keypad.

1.2 How to Read the Model Label

The model label is attached to the left side of the case.

ACD-13A

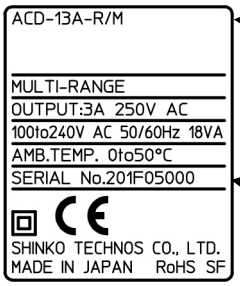

Model,
Power supply voltage (“1” is entered for 24 V AC/DC), option

Serial number

(e.g.) Relay contact output / Multi-range input

(Fig. 1.2-1)

ACR-13A

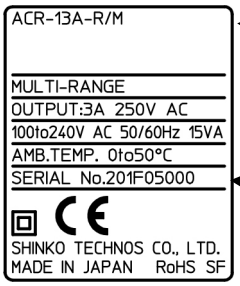

Model,
Power supply voltage (“1” is entered for 24 V AC/DC), option

Serial number

(e.g.) Relay contact output / Multi-range input

(Fig.1.2-2)

2. Name and Functions

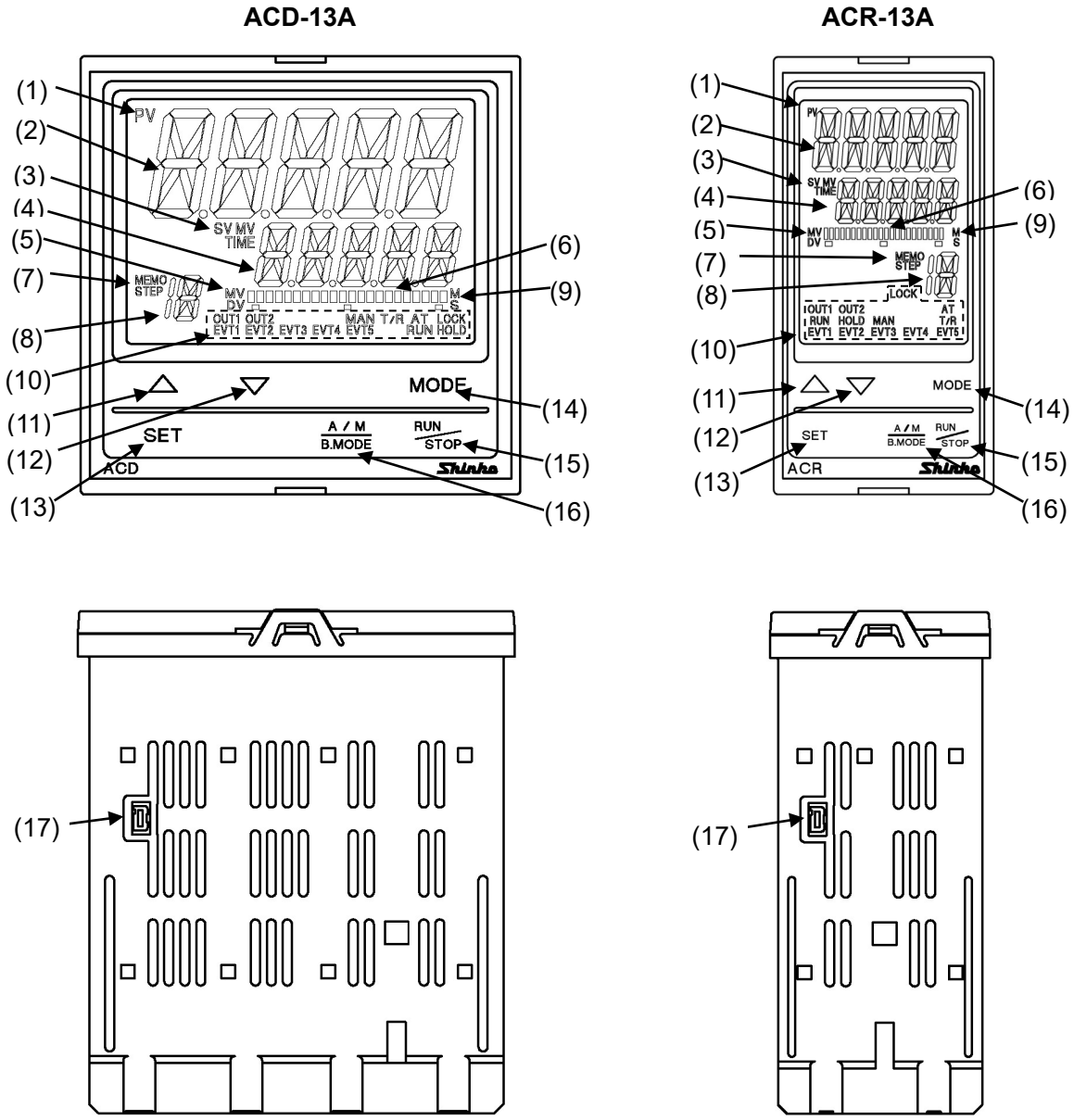

(Fig. 2-1)

Displays, Indicators

(1) PV indicator
Lights when PV is indicated in PV/SV Display Mode.

(2) PV Display
Indicates the PV or setting characters in setting mode.

(3) SV/MV/TIME indicator
SV: Lights when SV is indicated in PV/SV Display Mode.
MV: Lights when MV is indicated in PV/SV Display Mode.
TIME: Lights when remaining step time (program control) is indicated in PV/SV Display Mode.

(4) SV/MV/TIME Display
Indicates the SV, MV, remaining step time (program control) or set values in each setting mode.

(5) MV/DV indicator
MV: Lights when MV is indicated on the bar graph.
DV: Lights when DV is indicated on the bar graph.

(6) MV/DV Bar Graph Display
MV or DV is indicated on the bar graph.

(7) MEMO/STEP indicator
MEMO: Lights when a Set value memory number is indicated.
STEP: Lights when a step number is indicated during program control. Flashes during Wait action.

(8) MEMO/STEP Display
Indicates the Set value memory number or step number (program control).

(9) M/S indicator
M: Lights when step time unit “Hours:Minutes” is selected in the program control.
S: Lights when step time unit “Minutes:Seconds” is selected in the program control.

(10) Action indicators
OUT1: Lights when control output (OUT1) is ON. For direct current output type, flashes corresponding to the MV in 125 ms cycles.
OUT2: Lights when control output OUT2 (D□ option) is ON. For direct current output type, flashes corresponding to the MV in 125 ms cycles.
EVT1: Lights when Event output EVT1 output occurs.
EVT2: Lights when Event output EVT2 output occurs.
EVT3: Lights when Event output EVT3 output occurs.
EVT4: Lights when Event output EVT4 output occurs.
EVT5: Lights when Event output EVT5 output occurs.
MAN: Lights during manual control.
T/R: Lights during Serial communication (C, C5 option) [TX (transmitting) output].
AT: Flashes while AT (auto-tuning) or auto-reset is performing.
LOCK: Lights when Set value Lock 1, Lock 2, Lock 3 or Lock 4 is selected.
RUN: Lights while program is running.
HOLD: Flashes while program is on hold (suspended).

Keys

(11) △ **UP key**: Increases the numeric value.
If this key is pressed for 1 second during program operation (RUN), the unit proceeds to the next step. (This is the Advance function.)

(12) ▽ **DOWN key**: Decreases the numeric value.

(13) SET key
Switches setting groups.
Switches step numbers in the Program group.
Switches Set value memory numbers in the 'SV, Event group'.
Switches block numbers in the PID group.

(14) MODE key
Selects setting modes, and registers the set value (or selection).

(15) RUN/STOP key
For Fixed value control, PV/SV Display Mode or standby mode can be switched by pressing this key for 1 second.
In standby mode, pressing this key turns all outputs OFF as when the power supply is turned off.

In program mode, control RUNS/STOPS.
In standby mode, pressing this key RUNS program control.
Program control STOPS by pressing this key for 1 second during program operation (RUN).

(16) A/M B.MODE key
Switches Auto/Manual control.
If this key is pressed during setting mode, the unit reverts to the previous group or mode.

Case

(17) Console connector
By connecting to the USB communication cable (CMB-001, sold separately), the following operations can be conducted from an external computer using the Console software SWS-AC001M.
• Reading and setting of SV, PID and various set values
• Reading of PV and action status
• Function change

3. Mounting to the Control Panel

3.1 External Dimensions (Scale: mm)

ACD-13A

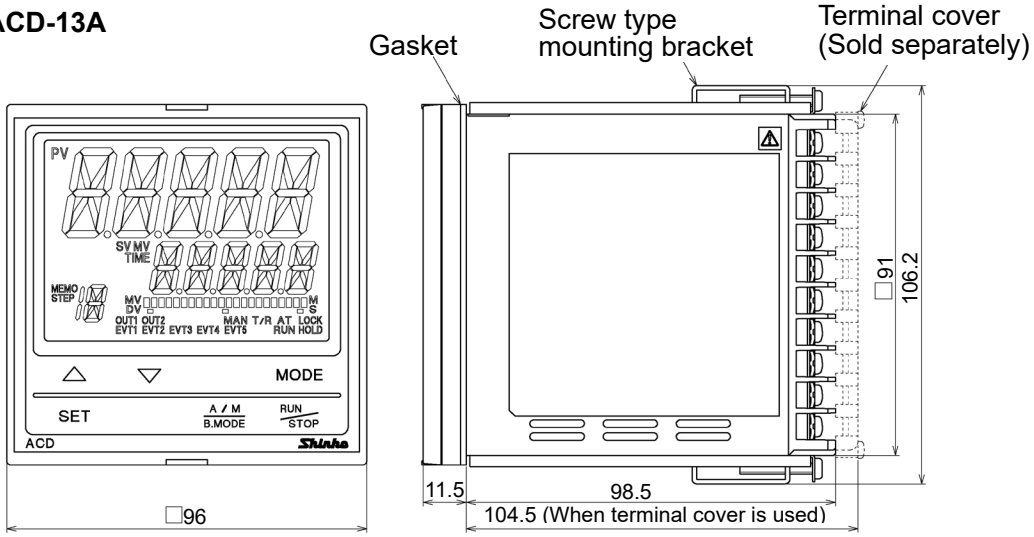

(Fig. 3.1-1)

ACR-13A

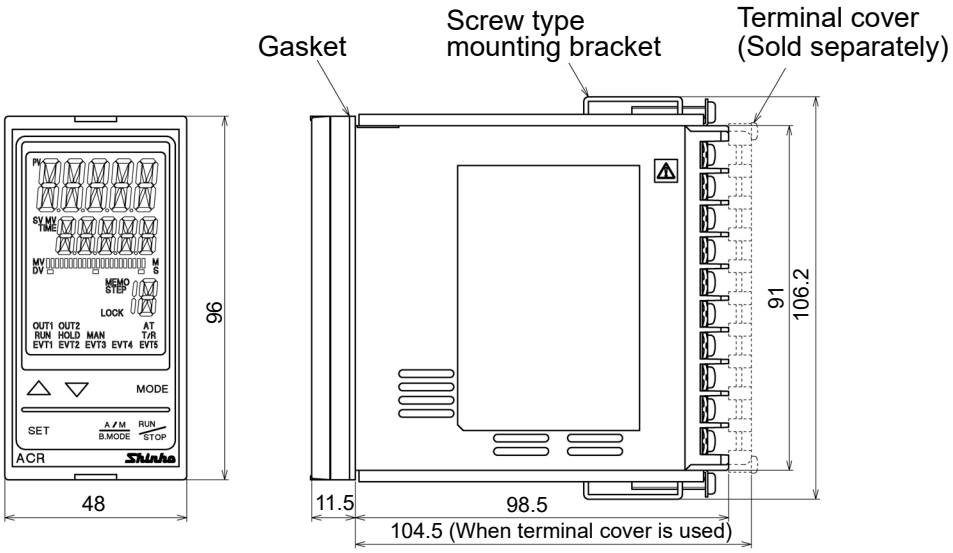

(Fig. 3.1-2)

3.2 Panel Cutout (Scale: mm)

⚠ Caution

If horizontal close mounting is used for the controller, IP66 specification (Drip-proof/ Dust-proof) may be compromised, and all warranties will be invalidated.

ACD-13A

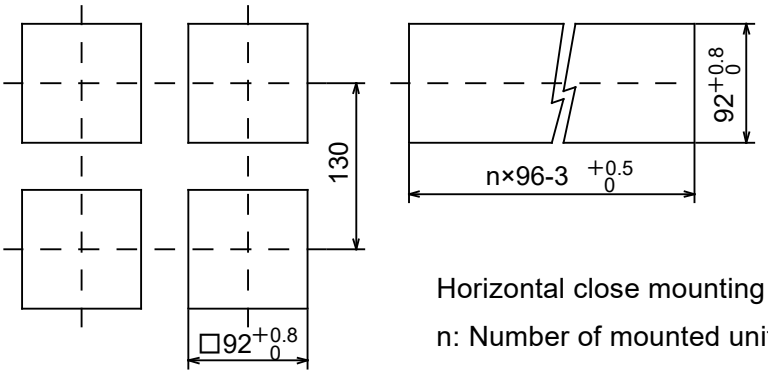

Horizontal close mounting

n: Number of mounted units

(Fig. 3.2-1)

ACR-13A

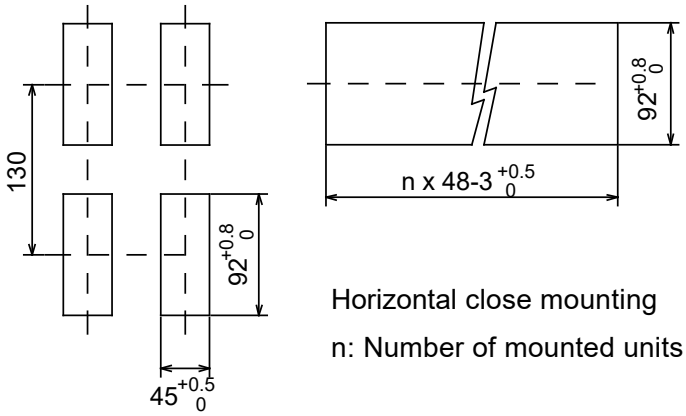

Horizontal close mounting

n: Number of mounted units

(Fig. 3.2-2)

3.3 CT (Current Transformer) External Dimensions (Scale: mm)

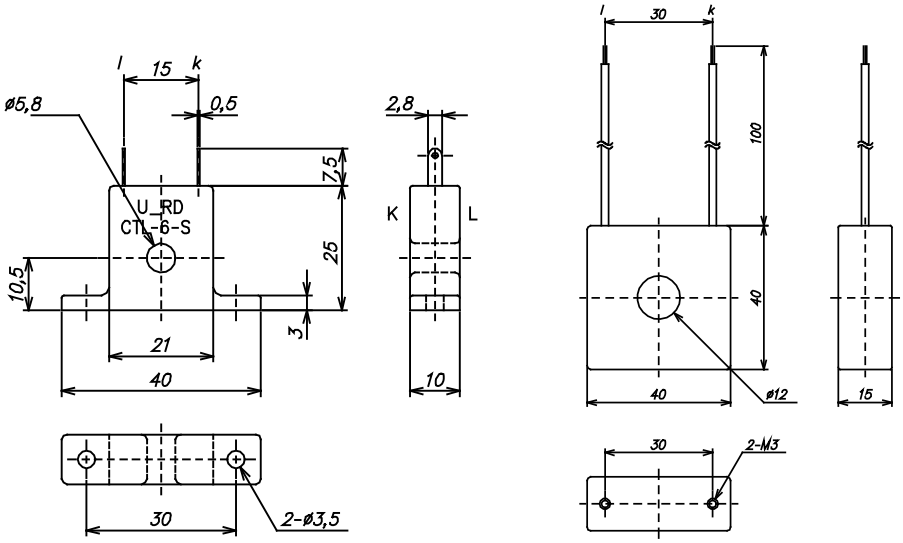

CTL-6-S-H (for 20 A)

CTL-12-S36-10L1U (for 100 A)

(Fig. 3.3-1)

3.4 Mounting to and Removal from the Control Panel (Common to ACD-13A, ACR-13A)

⚠ Caution

As the case is made of resin, do not use excessive force while screwing in the mounting bracket, or the case or mounting brackets could be damaged. The torque should be 0.12 N•m.

How to mount the unit

Mount the controller vertically to the flat, rigid panel to ensure it adheres to the Drip-proof/Dust-proof specification (IP66).

Mountable panel thickness: 1 to 8 mm

(1) Insert the controller from the front side of the panel.

(2) Attach the mounting brackets by the holes at the top and bottom of the case, and secure the controller in place with the screws.

How to remove the unit

(1) Turn the power to the unit OFF, and disconnect all wires before removing the unit.

(2) Loosen the screws of the mounting brackets, and remove the mounting brackets.

(3) Pull the unit out from the front of the panel.

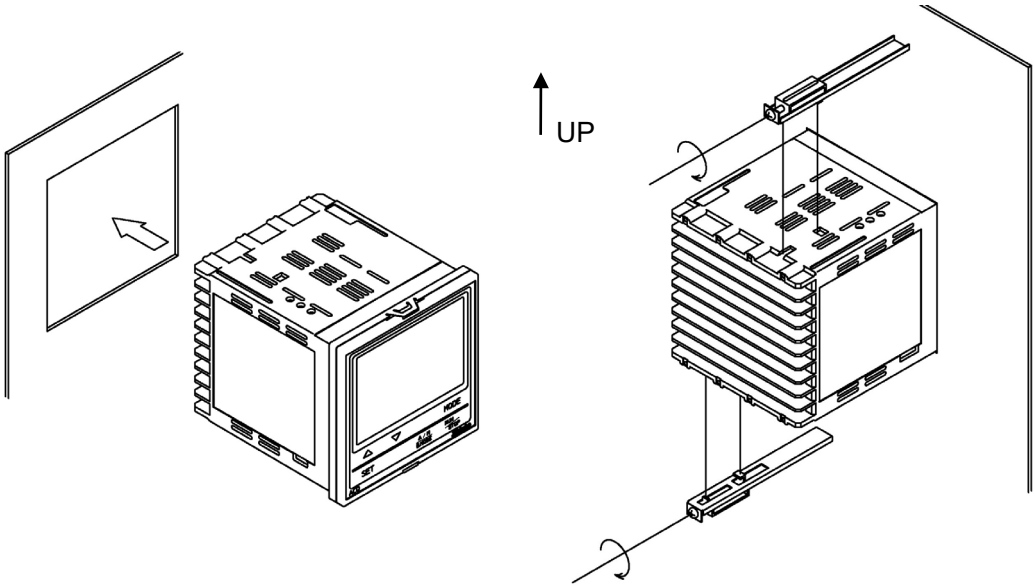

(Fig.3.4-1)

4. Wiring

⚠ Warning

Turn the power supply to the instrument OFF before wiring or checking. Working on or touching the terminal with the power switched ON may result in severe injury or death due to electrical shock.

4.1 Lead Wire Solderless Terminal

Use a solderless terminal with an insulation sleeve in which an M3 screw fits as shown below. The torque should be 0.63 N•m.

Solderless Terminal	Manufacturer	Model	Tightening Torque
Y-type	Nichifu Terminal Industries CO.,LTD.	TMEV1.25Y-3	0.63 N•m
	Japan Solderless Terminal MFG CO.,LTD.	VD1.25-B3A	
Ring-type	Nichifu Terminal Industries CO.,LTD.	TMEV1.25-3	
	Japan Solderless Terminal MFG CO.,LTD.	V1.25-3	

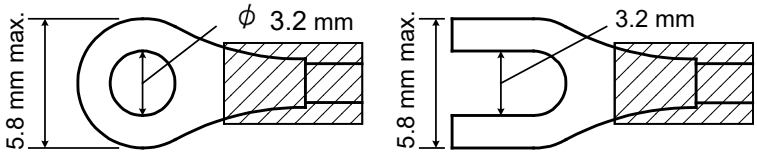

(Fig. 4.1-1)

4.2 Terminal Arrangement

ACD-13A

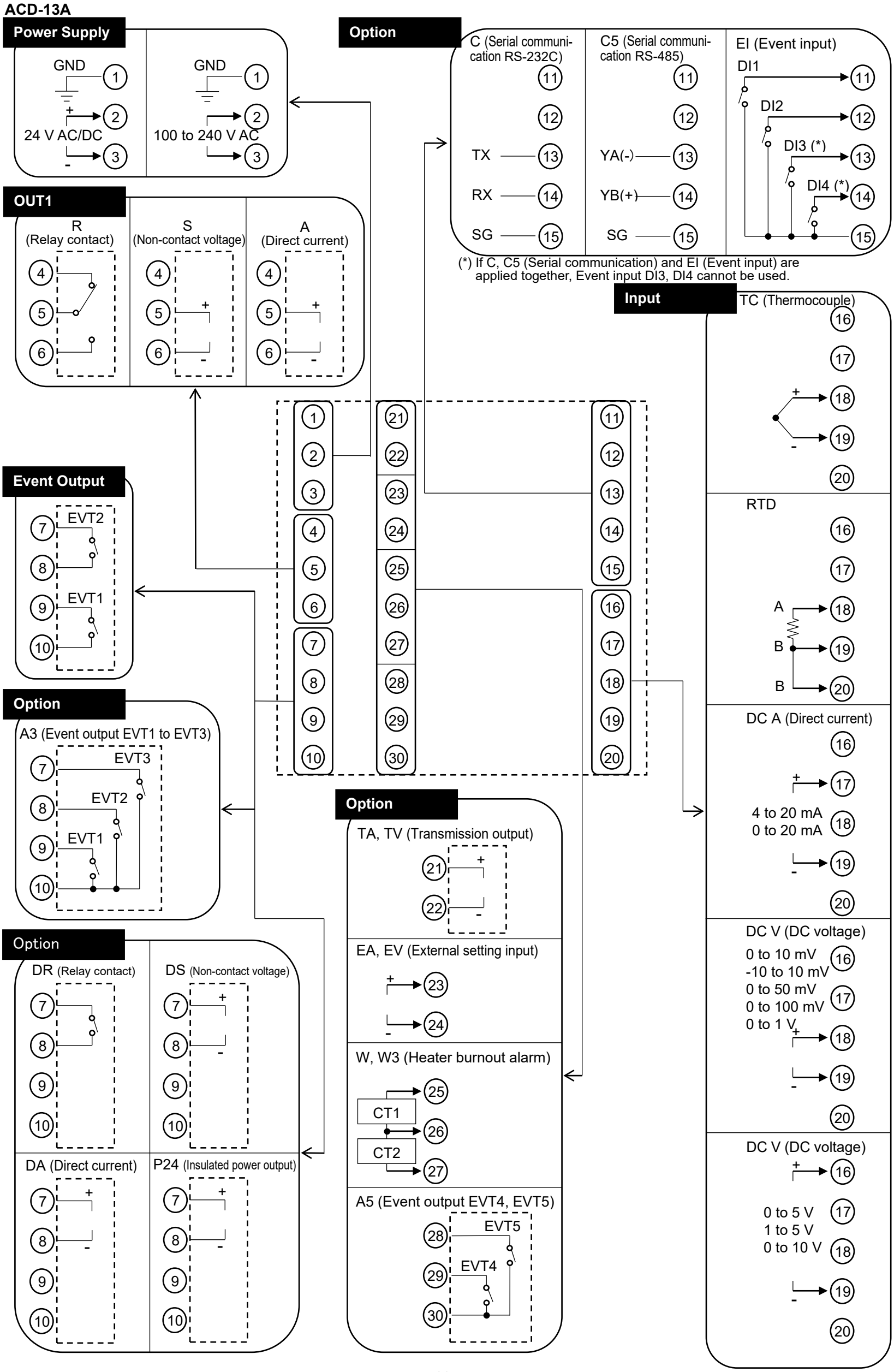

ACR-13A

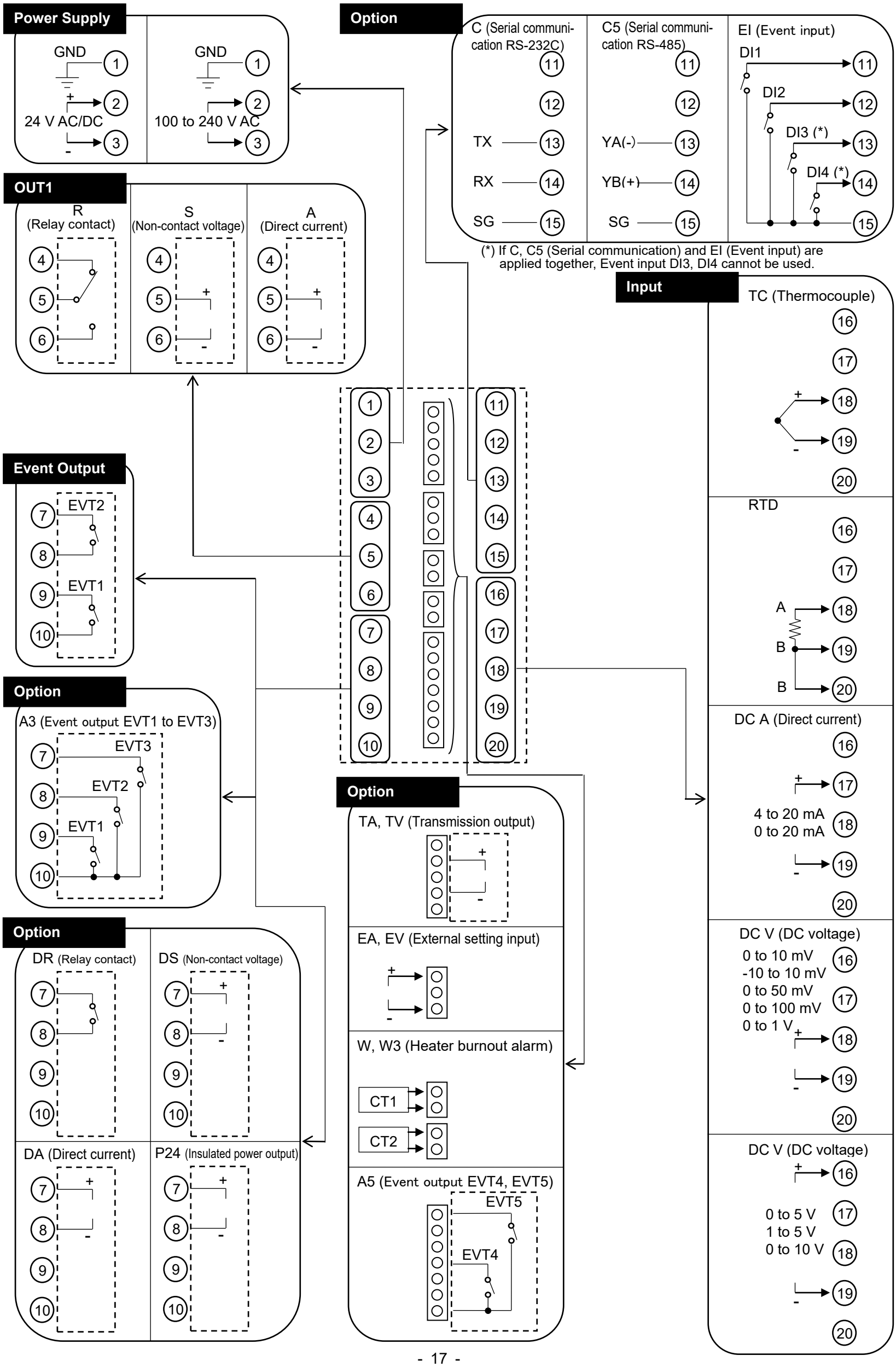
Power Supply
GND
24 V AC/DC
GND
100 to 240 V AC
Option
C (Serial communication RS-232C)
TX
RX
SG
C5 (Serial communication RS-485)
YA(-)
YB(+)
SG
EI (Event input)
DI1
DI2
DI3 (*)
DI4 (*)
(*) If C, C5 (Serial communication) and EI (Event input) are applied together, Event input DI3, DI4 cannot be used.
OUT1
R (Relay contact)
S (Non-contact voltage)
A (Direct current)
Input
TC (Thermocouple)
RTD
A
B
B
DC A (Direct current)
4 to 20 mA
0 to 20 mA
DC V (DC voltage)
0 to 10 mV
-10 to 10 mV
0 to 50 mV
0 to 100 mV
0 to 1 V
DC V (DC voltage)
0 to 5 V
1 to 5 V
0 to 10 V
Event Output
EVT2
EVT1
Option
A3 (Event output EVT1 to EVT3)
EVT3
EVT2
EVT1
Option
TA, TV (Transmission output)
EA, EV (External setting input)
W, W3 (Heater burnout alarm)
CT1
CT2
A5 (Event output EVT4, EVT5)
EVT5
EVT4
Option
DR (Relay contact)
DS (Non-contact voltage)
DA (Direct current)
P24 (Insulated power output)

4.3 Wiring Example

ACD-13A-R/M

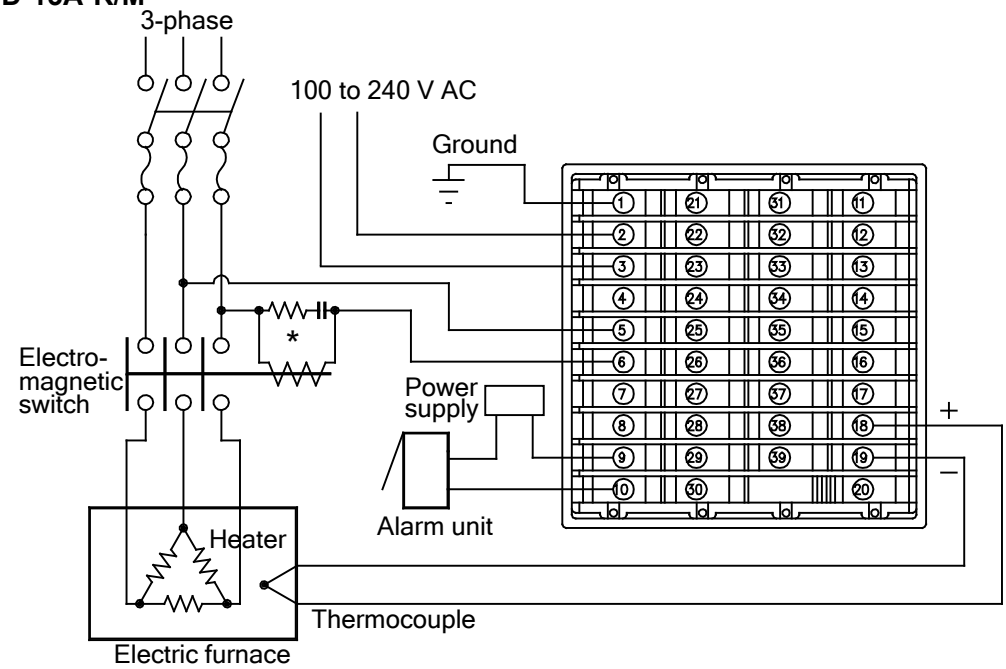

* To prevent the unit from harmful effects of unexpected high level noise, it is recommended that a surge absorber be installed between the electromagnetic switch coils.

(Fig. 4.3-1)

ACD-13A-S/M 1, W

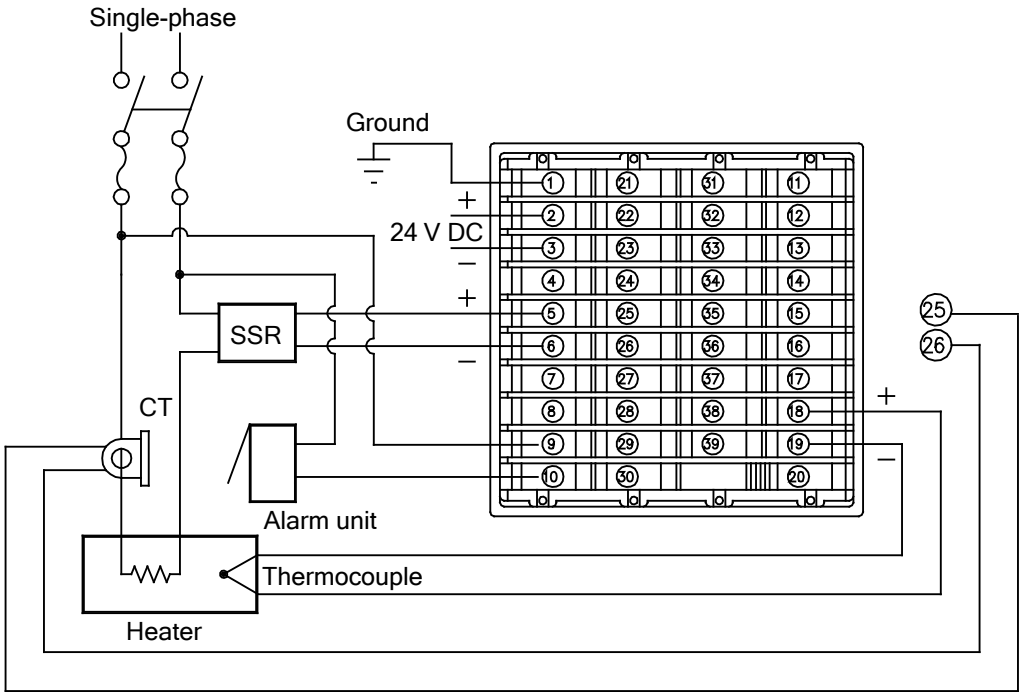

- Number of Shinko SSR units when connected in parallel:
  SA-400 series: 5 units, SA-500 series: 2 units
- For a 24 V AC/DC of power source, do not confuse polarity when using a direct current (DC).

(Fig. 4.3-2)

Current transformer (CT1, CT2) input (W, W3 option)

(1) This alarm is not usable for detecting current under phase control.

(2) Use the current transformer (CT) provided, and pass one lead wire of heater circuit into the hole of the CT.

(3) When wiring, keep CT wire away from AC sources and load wires to avoid the external interference.

[Single-phase heater]

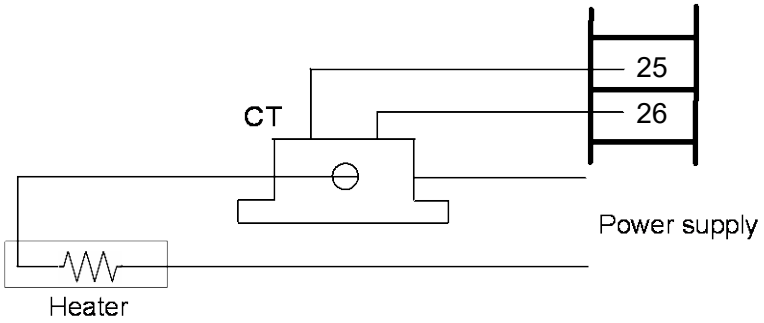

(Fig. 4.3-3)

[Three-phase heater]

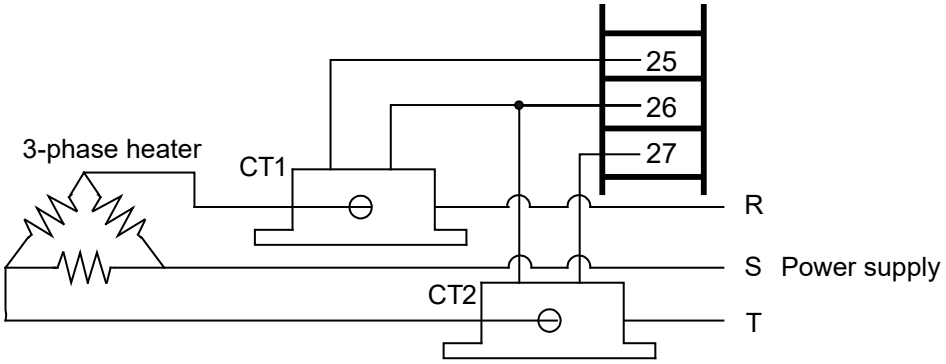

(Fig. 4.3-4)

5. Outline of Key Operation and Setting Groups

There are 2 setting methods for this controller; Simplified setting (traditional setting method), Group selection. For each setting method, refer to page 21 and subsequent pages.

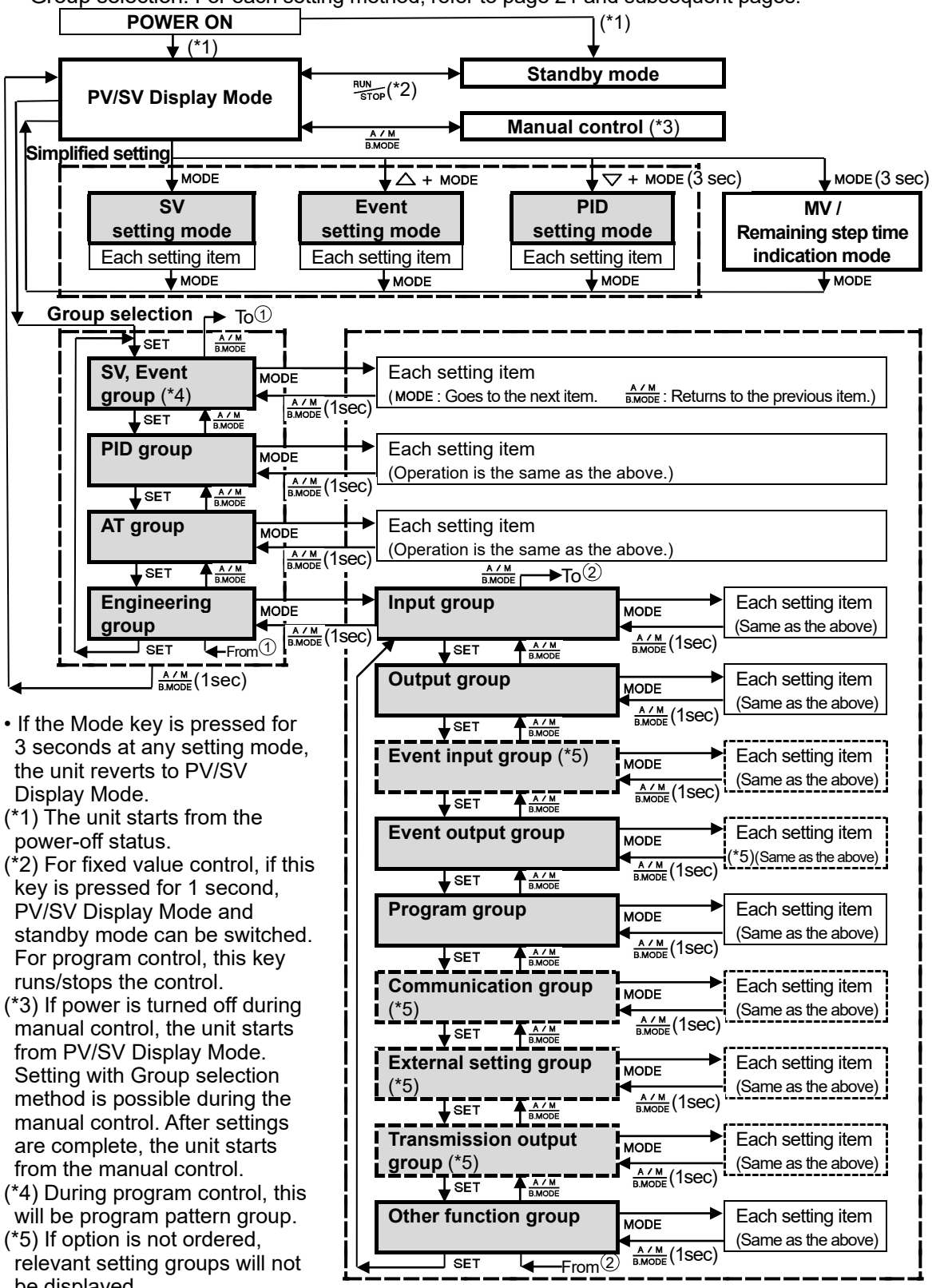

- If the Mode key is pressed for 3 seconds at any setting mode, the unit reverts to PV/SV Display Mode.

(*1) The unit starts from the power-off status.

(*2) For fixed value control, if this key is pressed for 1 second, PV/SV Display Mode and standby mode can be switched. For program control, this key runs/stops the control.

(*3) If power is turned off during manual control, the unit starts from PV/SV Display Mode. Setting with Group selection method is possible during the manual control. After settings are complete, the unit starts from the manual control.

(*4) During program control, this will be program pattern group.

(*5) If option is not ordered, relevant setting groups will not be displayed.

6. Setup

Factory default of this controller:

Input type: K, -200 to 1370℃

Control action: PID control (with AT), Reverse action (Heating action)

Event output (EVT1, EVT2): No event

Setup (setting the Input type, control action, Event output type, etc.) should be done before using this controller, according to the user's conditions.

Setup is conducted in the Engineering group.

The Engineering group consists of Input group, Output group, Event input group (optional), Event output group, Program group, Communication group, External setting group, Transmission output group and Other function group.

If the user's specification is the same as the factory default of the instrument, it is not necessary to set up the controller. Proceed to Section "7. Settings" (pp. 52-68).

Factory default of the Engineering group

• Input group (pp. 26-28)

Setting Item	Factory Default
Input type	K, -200 to 1370℃
Scaling high limit	1370℃
Scaling low limit	-200℃
Decimal point place	No decimal point
PV filter time constant	0.0 seconds
Sensor correction	0.0℃

• Output group (pp. 29-31)

Setting Item	Factory Default
OUT1 proportional cycle	Relay contact output: 30 seconds Non-contact voltage output: 3 seconds Direct current output: Not available
OUT2 proportional cycle (D□ option)	Relay contact output: 30 seconds Non-contact voltage output: 3 seconds Direct current output: Not available
OUT1 high limit	100%
OUT1 low limit	0%
OUT1 ON/OFF hysteresis	1.0℃
OUT2 cooling method (D□ option)	Air cooling
OUT2 high limit (D□ option)	100%
OUT2 low limit (D□ option)	0%
Overlap/Dead band (D□ option)	0.0℃
OUT2 ON/OFF hysteresis (D□ option)	1.0℃
Direct/Reverse action	Reverse action
OUT1 MV preset output	0.0%
OUT2 MV preset output (D□ option)	0.0%

• **Event input group (EI option) (pp. 32-34)**

Setting Item	Factory Default
Event input EVI1 allocation	No event
Event input EVI2 allocation	No event
Event input EVI3 allocation	No event
Event input EVI4 allocation	No event

• **Event output group (pp. 34-41)**

Setting Item	Factory Default
Event output EVT1 allocation	No event
Event output EVT2 allocation	No event
Event output EVT3 allocation (A3 option)	No event
Event output EVT4 allocation (A5 option)	No event
Event output EVT5 allocation (A5 option)	No event

• **Program group (p. 42)**

Setting Item	Factory Default
Fixed value control/Program control	Fixed value control
Step time unit	Hours:Minutes
Power restore action	Stops after power is restored.
Program start temperature	0℃

• **Communication group (C or C5 option) (pp. 43-44)**

Setting Item	Factory Default
Communication protocol	Shinko protocol
Instrument number	0
Communication speed	9600 bps
Data bit/Parity	7 bits/Even
Stop bit	1
SVTC bias	0℃

• **External setting group (EA□ or EV□ option) (p. 45)**

Setting Item	Factory Default
Remote/Local	Local
External setting input high limit	1370℃
External setting input low limit	-200℃
Remote bias	0℃

• **Transmission output group (TA1 or TV1 option) (p. 46)**

Setting Item	Factory Default
Transmission output type	PV transmission
Transmission output high limit	1370℃
Transmission output low limit	-200℃

• **Other function group (pages 47-51)**

Setting Item	Factory Default
Set value lock	Unlock
PID zone function	Not used
SV rise rate	0 ℃/minute
SV fall rate	0 ℃/minute
Indication when output OFF	OFF indication
Backlight selection	All are backlit
PV color	Red
PV color range	5.0℃
Backlight time	0 minutes
Bar graph	MV indication
Deviation unit	1℃

6.1 Turn the Power Supply to the Unit ON.

After the power is turned on, the PV Display indicates the input type, and the SV/MV/TIME Display indicates the input range high limit value (thermocouple, RTD inputs) or scaling high limit
value (DC voltage, current inputs) for approximately 3 seconds. (Table 6.1-1)
During this time, all outputs and the indicators are in OFF status.
Control will then start, indicating the PV on the PV Display and SV on the SV/MV/TIME Display.
While the control output OFF function is working, the PV Display indicates oFF□□.
Indication differs depending on the selection in [Indication when output OFF].

(Table 6.1-1)

Sensor Input	℃		℉	
	PV Display	SV/MV/TIME Display	PV Display	SV/MV/TIME Display
K	K□□□C	□1370	K□□□F	□2498
	K□□ .C	□400.0	K□□ .F	□752.0
J	J□□□C	□1000	J□□□F	□1832
R	R□□□C	□1760	R□□□F	□3200
S	S□□□C	□1760	S□□□F	□3200
B	b□□□C	□1820	b□□□F	□3308
E	E□□□C	□□800	E□□□F	□1472
T	T□□ .C	□400.0	T□□ .F	□752.0
N	N□□□C	□1300	N□□□F	□2372
PL-Ⅱ	PL2□C	□1390	PL2□F	□2534
C(W/Re5-26)	c□□□C	□2315	c□□□F	□4199
Pt100	Pt□ .C	□850.0	Pt□ .F	1562.0
JPt100	JPt .C	□500.0	JPt .F	□932.0
Pt100	Pt□□C	□□850	Pt□□F	□1562
JPt100	JPt□C	□□500	JPt□F	□□932
Pt100	Pt1 .C	□100.0	Pt2 .F	□212.0
Pt100	Pt5 .C	□500.0	Pt9 .F	□932.0
4 to 20 mA DC	420MA	Scaling high limit value		
0 to 20 mA DC	020MA			
0 to 10 mV DC	□10MV			
-10 to 10 mV DC	-10MV			
0 to 50 mV DC	□50MV			
0 to 100 mV DC	100MV			
0 to 1 V DC	0□1□V			
0 to 5 V DC	0□5□V			
1 to 5 V DC	1□5□V			
0 to 10 V DC	010□V			

6.2 Basic Operation of Settings

To proceed to each setting mode, refer to each setting mode.

- To set each setting item, use the △ or ▽ key.
- If the MODE key is pressed, the set value is registered, and the unit proceeds to the next setting item.
  If the MODE key is pressed at the last setting item, the unit proceeds to the first setting item.
- Pressing the A/M B.MODE key reverts to the previous setting item.
- Pressing the A/M B.MODE key for 1 second reverts to the previous setting level (reverts from setting item to each group).
- If the MODE key is pressed for 3 seconds at each setting group or item, the unit reverts to PV/SV Display Mode.

6.3 Engineering Group

6.3.1 Input Group

To enter the Input group, follow the procedure below.

(1) G_ENG Press the SET key 4 times in PV/SV Display Mode.
The unit enters the Engineering group.

(2) E_INP Press the MODE key. The unit proceeds to the Input group.

(3) SENS K C Press the MODE key.
The unit proceeds to the 'Input type'.

Character	Setting Item, Function, Setting Range	Factory Default
SENS K C	**Input type** • Selects an input type from thermocouple (10 types), RTD (2 types), direct current (2 types) and DC voltage (8 types), and the unit ℃/℉. • **If the input type is changed, the scaling high and low limit will become the altered input range high and low limit values.** • When changing the input from DC voltage to other inputs, remove the sensor connected to this controller first, then change the input. If the input is changed with the sensor connected, the input circuit may break. • **With DC voltage input, the (+) side input terminal number differs as follows.** **(+) side input terminal number of 0 to 5V DC, 1 to 5V DC, 0 to 10V DC: 16** **(+) side input terminal number of 0 to 10 mV DC, -10 to 10 mV DC, 0 to 50 mV DC, 0 to 100 mV DC, 0 to 1 V DC: 18** • **Input types**	K (-200 to 1370℃)

K C	K	-200	to	1370	℃
K .C	K	-200.0	to	400.0	℃
J C	J	-200	to	1000	℃
R C	R	0	to	1760	℃
S C	S	0	to	1760	℃
b C	B	0	to	1820	℃
E C	E	-200	to	800	℃
T .C	T	-200.0	to	400.0	℃
N C	N	-200	to	1300	℃
PL2 C	PL-Ⅱ	0	to	1390	℃
c C	C(W/Re5-26)	0	to	2315	℃
PT .C	Pt100	-200.0	to	850.0	℃
JPT .C	JPt100	-200.0	to	500.0	℃
PT C	Pt100	-200	to	850	℃
JPT C	JPt100	-200	to	500	℃
PT 1 .C	Pt100	-100.0	to	100.0	℃
PT5 .C	Pt100	-100.0	to	500.0	℃
K F	K	-328	to	2498	℉
K .F	K	-328.0	to	752.0	℉

Character	Setting Item, Function, Setting Range	Factory Default

J□□□F	J	-328	to	1832 ℉
R□□□F	R	32	to	3200 ℉
S□□□F	S	32	to	3200 ℉
b□□□F	B	32	to	3308 ℉
E□□□F	E	-328	to	1472 ℉
T□□ .F	T	-328.0	to	752.0 ℉
N□□□F	N	-328	to	2372 ℉
PL2□F	PL-Ⅱ	32	to	2534 ℉
c□□□F	C(W/Re5-26)	32	to	4199 ℉
Pt□ .F	Pt100	-328.0	to	1562.0 ℉
JPt .F	JPt100	-328.0	to	932.0 ℉
Pt□□F	Pt100	-328	to	1562 ℉
JPt□F	JPt100	-328	to	932 ℉
Pt2 .F	Pt100	-148.0	to	212.0 ℉
Pt9 .F	Pt100	-148.0	to	932.0 ℉
420MA	4 to 20 mA DC	-2000	to	10000
020MA	0 to 20 mA DC	-2000	to	10000
□ 10MV	0 to 10 mV DC	-2000	to	10000
- 10MV	-10 to 10 mV DC	-2000	to	10000
□50MV	0 to 50 mV DC	-2000	to	10000
100MV	0 to 100 mV DC	-2000	to	10000
0□ 1□V	0 to 1 V DC	-2000	to	10000
0□5□V	0 to 5 V DC	-2000	to	10000
1□5□V	1 to 5 V DC	-2000	to	10000
0 10□V	0 to 10 V DC	-2000	to	10000

Scaling high limit (*) — 1370℃

- Sets scaling high limit value.
- Setting range: Scaling low limit value to input range high limit value DC voltage, current inputs: -2000 to 10000 (The placement of the decimal point follows the selection.)

Scaling low limit (*) — -200℃

- Sets scaling low limit value.
- Setting range: Input range low limit value to scaling high limit value DC voltage, current inputs: -2000 to 10000 (The placement of the decimal point follows the selection.)

(*) In the case of DC voltage, current inputs, if Scaling high limit value< Scaling low limit value is set, PV scaling decrease/input increase is possible.

Character	Setting Item, Function, Setting Range	Factory Default
dP 0	**Decimal point place** • Selects decimal point place. Available only for DC voltage and current inputs. • 0 : No decimal point 0.0 : 1 digit after decimal point 0.00 : 2 digits after decimal point 0.000 : 3 digits after decimal point 0.0000 : 4 digits after decimal point	No decimal point
FILT 0.0	**PV filter time constant** • Sets PV filter time constant. If the value is set too high, it affects control results due to the delay of response. • Setting range: 0.0 to 100.0 seconds	0.0 seconds
ho 0.0	**Sensor correction** • Sets the correction value for the sensor. This corrects the input value from the sensor. When a sensor cannot be set at the exact location where control is desired, the sensor-measured temperature may deviate from the temperature in the controlled location. When controlling with multiple controllers, sometimes the measured temperatures do not concur due to differences in sensor accuracy or dispersion of load capacities. In such a case, the control can be set at the desired temperature by adjusting the input value of sensors. However, it is effective within the input rated range regardless of the sensor correction value. PV after sensor correction= Current PV + (Sensor correction value) • Setting range: -200.0 to 200.0℃ (℉) DC voltage, current inputs: -2000 to 2000 (The placement of the decimal point follows the selection.)	0.0℃

6.3.2 Output Group

To enter the Output group, follow the procedure below.

(1) G_ENG Press the SET key 4 times in PV/SV Display Mode.
The unit enters the Engineering group.

(2) E_INP Press the MODE key. The unit proceeds to the Input group.

(3) E_oUT Press the SET key. The unit proceeds to the Output group.

(4) c 30 Press the MODE key.
The unit proceeds to the 'OUT1 proportional cycle'.

Character	Setting Item, Function, Setting Range	Factory Default
c 30	**OUT1 proportional cycle** • Sets OUT1 proportional cycle. For relay contact output, if the proportional cycle time is decreased, the frequency of the relay action increases, and the life of the relay contact is shortened. Not available if OUT1 is in ON/OFF control or direct current output type. • Setting range: 1 to 120 seconds	Relay contact: 30 sec Non-contact voltage: 3 sec
c_b 30	**OUT2 proportional cycle** • Sets OUT2 proportional cycle. For relay contact output, if the proportional cycle time is decreased, the frequency of the relay action increases, and the life of the relay contact is shortened. Available when the D□ option is ordered. Not available if OUT2 is in ON/OFF control. • Setting range: 1 to 120 seconds	Relay contact: 30 sec Non-contact voltage: 3 sec
oLH 100	**OUT1 high limit** • Sets OUT1 high limit value. Not available if OUT1 is in ON/OFF control • Setting range: OUT1 low limit value to 100% (Direct current output type: OUT1 low limit value to 105%)	100%
oLL 0	**OUT1 low limit** • Sets OUT1 low limit value. Not available if OUT1 is in ON/OFF control • Setting range: 0% to OUT1 high limit value (Direct current output type: -5% to OUT1 high limit value)	0%
HYS 1.0	**OUT1 ON/OFF hysteresis** • Sets OUT1 ON/OFF hysteresis. Available only when OUT1 is in ON/OFF control • Setting range: 0.1 to 1000.0℃ (℉), DC voltage, current inputs: 1 to 10000 (The placement of the decimal point follows the selection.)	1.0℃

Character	Setting Item, Function, Setting Range	Factory Default
cAcr AIR	**OUT2 cooling method** • Selects OUT2 cooling method from air, oil or water cooling. Available when the D□ option is ordered. Not available if OUT2 is in ON/OFF control. • AIR□□: Air cooling (linear characteristics) oIL□□: Oil cooling (1.5th power of the linear characteristics) WAr□□: Water cooling (2nd power of the linear characteristics) 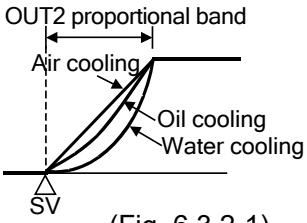 (Fig. 6.3.2-1)	Air cooling
oLHb 100	**OUT2 high limit** • Sets OUT2 high limit value. Available if the D□ option is ordered. Not available if OUT2 is in ON/OFF control. • Setting range: OUT2 low limit value to 100% (Direct current output type: OUT2 low limit value to 105%)	100%
oLLb 0	**OUT2 low limit** • Sets OUT2 low limit value. Available if the D□ option is ordered. Not available if OUT2 is in ON/OFF control. • Setting range: 0% to OUT2 high limit value (Direct current output type: -5% to OUT2 high limit value)	0%
db 0.0	**Overlap band/Dead band** • Sets the overlap band or dead band for OUT1 and OUT2. + Set value: Dead band, –Set value: Overlap band Available only when the D□ option is ordered • Setting range: -200.0 to 200.0℃ (℉), DC voltage, current inputs: -2000 to 2000 (The placement of the decimal point follows the selection.)	0.0℃
HYSb 1.0	**OUT2 ON/OFF hysteresis** • Sets OUT2 ON/OFF hysteresis. Available when the D□ option is ordered. Available when OUT2 is in ON/OFF control action. • Setting range: 0.1 to 1000.0℃ (℉), DC voltage, current inputs: 1 to 10000 (The placement of the decimal point follows the selection.)	1.0℃
conr HEAr	**Direct/Reverse action** • Selects either Reverse (Heating) or Direct (Cooling) control action. • HEAr□ : Reverse (Heating) action cooL□ : Direct (Cooling) action	Reverse (Heating) action

Character	Setting Item, Function, Setting Range	Factory Default
PRST 1 0.0	**OUT1 MV preset output** • If Preset output 1 or 2 is selected in [Event input allocation], OUT1 MV can be set. **Preset output 1**: Control is performed with the preset output MV if sensor is burnt out during Event Input ON. **Preset output 2**: Control is performed with the preset output MV when Event Input is ON. • Available only when EI option is ordered • Setting range: 0.0 to 100.0 % (Direct current output: -5.0 to 105.0%)	0.0%
PRST 2 0.0	**OUT2 MV preset output** • If Preset output 1 or 2 is selected in [Event input allocation], OUT2 MV can be set. **Preset output 1**: Control is performed with the preset output MV if sensor is burnt out during Event Input ON. **Preset output 2**: Control is performed with the preset output MV when Event Input is ON. • Available when the D□ option and EI option are ordered • Setting range: 0.0 to 100.0% (Direct current output: -5.0 to 105.0%)	0.0%

6.3.3 Event Input Group

This group is available only when the EI option is ordered.
To enter the Event input group, follow the procedure below.

(1) G_ENG Press the SET key 4 times in PV/SV Display Mode.
The unit enters the Engineering group.

(2) E_INP Press the MODE key. The unit proceeds to the Input group.

(3) E_EVI Press the SET key twice. The unit proceeds to the Event input group.

(4) EVI1 1 000 Press the MODE key.
The unit proceeds to the 'Event input EVI1 allocation'.

Character	Setting Item, Function, Setting Range	Factory Default
EVI1 1 000	**Event input EVI1 allocation** • Selects Event input EVI1 from Event input allocation table. • Refer to the Event input allocation table.	000 (No event)
EVI1 2 000	**Event input EVI2 allocation** • Selects Event input EVI2 from Event input allocation table. • Refer to the Event input allocation table.	000 (No event)
EVI1 3 000	**Event input EVI3 allocation** • Selects Event input EVI3 from Event input allocation table. • Refer to the Event input allocation table.	000 (No event)
EVI1 4 000	**Event input EVI4 allocation** • Selects Event input EVI4 from Event input allocation table. • Refer to the Event input allocation table.	000 (No event)

Event Input Allocation Table

Selected value	Event input function	Input ON (Closed)	Input OFF (Open)	Remarks
000	No event			
001	Set value memory	2^n	1	n=0 to 3 (*1)
002	Control ON/OFF	Control OFF	Control ON	Control output OFF function
003	Direct/Reverse action	Direct action	Reverse action	Always effective
004	Timer Start/Stop	Start	Stop	
005	PV Display; PV holding	Holding	Not holding	Ineffective when controlling
006	PV Display; PV peak value holding	Holding	Not holding	Ineffective when controlling

Selected value	Event input function	Input ON (Closed)	Input OFF (Open)	Remarks
007	Preset output 1	Preset output (*2)	Standard control	If sensor is burnt out, the unit maintains control with the preset output MV.
008	Auto/Manual control	Manual control	Automatic control	
009	Remote/Local	Remote	Local	Effective only when EA□ or EV□ option is ordered
010	Program mode; RUN/STOP	RUN	STOP	Level action when power is turned on
011	Program mode; Holding/Not holding	Holding	Not holding	Level action when power is turned on
012	Program mode; Advance function	Advance	Standard control	Level action when power is turned on
013	Integral action holding	Integral action Holding	Standard integral action	Control continues with the integral value being held.
014	Preset output 2	Preset output (*2)	Standard control	The unit maintains control with the preset output MV.

Signal edge action from OFF to ON or from ON to OFF is engaged.
If “010 (Program mode RUN/STOP)” is selected in [Event input EVI1 allocation], the following action will be performed. However, only when power is turned ON, level action [ON (Closed) or OFF (Open)] is engaged.

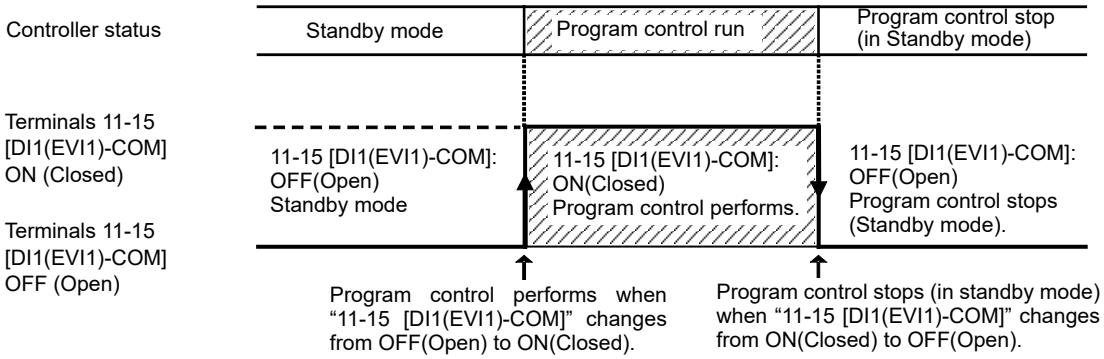

(Fig. 6.3.3-1)

OR calculation [if any one is ON (closed), the function activates] begins if the same functions except 001 (Set value memory) have been selected for plural Event inputs.

(*1) The value that 1 (one) is added to 2^n, is indicated on the MEMO/STEP Display.
(e.g.) If EVI1(2^0)=OFF, EVI2(2^1)=ON, then 3 (2^1 +1) is indicated.
2^0, 2^1, 2^2 and 2^3 will be allocated to Event input EVI1 to EVI4 respectively, and the Set value memory number will be determined by each value of EVI1 to EVI4.
(Refer to Section “8.7 Set Value Memory Function” on pp.76, 77.)

(*2) Preset value can be set in [OUT1 MV preset output], [OUT2 MV preset output] (p.31) in the Output group.

6.3.4 Event Output Group

To enter the Event output group, follow the procedure below.

(1) G_ENG Set the SET key 4 times in PV/SV Display Mode.
The unit enters the Engineering group.

(2) E_INP Press the MODE key. The unit proceeds to the Input group.

(3) E_EVo Press the SET key multiple times until characters of the Event output group appear.

(4) EVTo1 000 Press the MODE key.
The unit proceeds to the ‘Event output EVT1 allocation’.

Character	Setting Item, Function, Setting Range	Factory Default
EVTo1 000	**Event output EVT1 allocation** • Selects Event output EVT1 from the Event output allocation table. • Refer to the Event Output Allocation Table.	000 (No event)
EVTo2 000	**Event output EVT2 allocation** • Selects Event output EVT2 from the Event output allocation table. • Refer to the Event Output Allocation Table.	000 (No event)
EVTo3 000	**Event output EVT3 allocation** • Selects Event output EVT3 from the Event output allocation table. Available only when A3 option is ordered. • Refer to the Event Output Allocation Table.	000 (No event)
EVTo4 000	**Event output EVT4 allocation** • Selects Event output EVT4 from the Event output allocation table. Available only when A5 option is ordered. • Refer to the Event Output Allocation Table.	000 (No event)
EVTo5 000	**Event output EVT5 allocation** • Selects Event output EVT5 from the Event output allocation table. Available only when A5 option is ordered. • Refer to the Event Output Allocation Table.	000 (No event)

Event Output Allocation Table

Selected value	Event output function	Proceeding to the lower level with the MODE key	Remarks
000	No event		
001	Alarm output; High limit alarm	Alarm hysteresis ↓ MODE Alarm delay time ↓ MODE Alarm Energized/De-energized	
002	Alarm output; Low limit alarm	Same as the High limit alarm	
003	Alarm output; High/Low limits	Same as the High limit alarm	
004	Alarm output; High/Low limits independent	Same as the High limit alarm	
005	Alarm output; High/Low limit range	Same as the High limit alarm	
006	Alarm output; High/Low limit range independent	Same as the High limit alarm	
007	Alarm output; Process high alarm	Same as the High limit alarm	
008	Alarm output; Process low alarm	Same as the High limit alarm	
009	Alarm output; High limit with standby	Same as the High limit alarm	
010	Alarm output; Low limit with standby	Same as the High limit alarm	
011	Alarm output; High/Low limits with standby	Same as the High limit alarm	
012	Alarm output; High/Low limits with standby independent	Same as the High limit alarm	
013	Timer output linked to “Timer Start/Stop” in [Event input allocation].	Timer output delay action ↓ MODE Timer output time unit ↓ MODE OFF delay time ↓ MODE ON delay time	Select “Timer Start/Stop” in [Event input allocation]. (p.32)
014	Timer output linked to “Timer Start/Stop” in [Event input allocation]. Control ON during timer operation. Control OFF after time is up.	Same as the above	Same as the above

Selected value	Event output function	Proceeding to the lower level with the MODE key	Remarks
015	Heater burnout alarm output	Heater rated current ↓ MODE Heater burnout alarm 1 value ↓ MODE Heater burnout alarm 2 value	Select the rated current 20 A or 100 A. (Can be set within the selected rated current.) (*)
016	Loop break alarm output	Loop break alarm time ↓ MODE Loop break alarm band	
017	Time signal output	Time signal output step ↓ MODE Time signal output OFF time ↓ MODE Time signal output ON time	Time signal output is turned off when the performing step is complete.
018	Output during AT		Outputs during AT.
019	Pattern end output		Program control

• **If an alarm type is changed, the alarm value will return to 0 (0.0).**
• If “001 to 012 (Alarm output)” is selected: Individual setting for event outputs
If “013 to 019” is selected: Common setting to the plural event outputs
(*) Available only when W or W3 option is ordered.

Pattern End Output

After the program control is completed, pattern end output is turned ON.
The following program pattern shows that the temperature rises to 200℃ for 1 hour, and stays at 200℃ for 2 hours after program control starts.

Step	1	2
Step SV	200℃	200℃
Step time	1:00	2:00

Pattern end output is shown below in (Fig. 6.3.4-1).

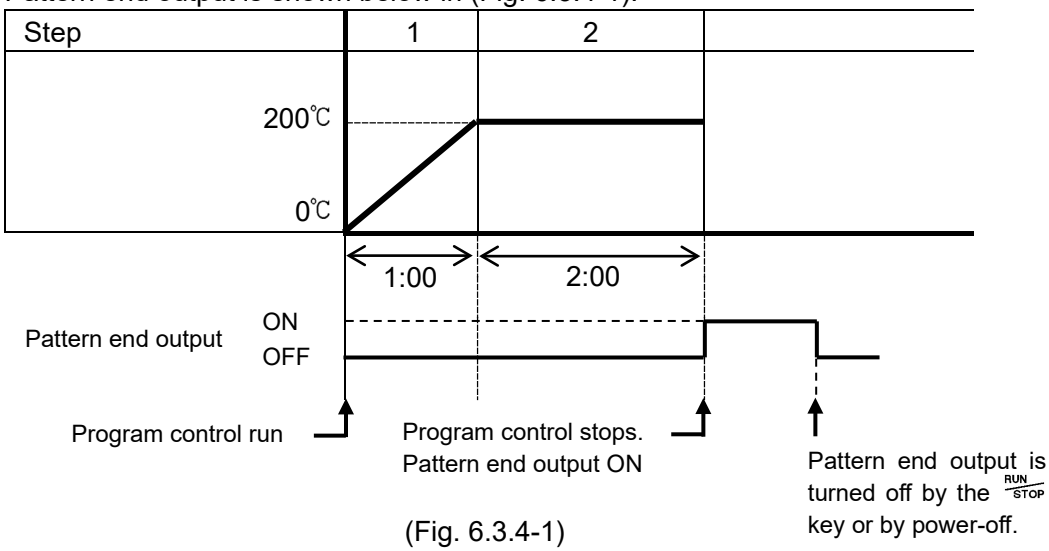

(Fig. 6.3.4-1)

• **Alarm output setting items [When Alarm output (001 to 012) is selected]**

Character	Setting Item, Function, Setting Range	Factory Default
A1HYS 1.0 (*)	**Alarm hysteresis** • Sets Alarm hysteresis. • Setting range: 0.1 to 1000.0℃ (℉) DC voltage, current inputs: 1 to 10000 (The placement of the decimal point follows the selection.)	1.0℃
A1dLY 0 (*)	**Alarm delay time** • Sets Alarm action delay time. When setting time has elapsed after the input enters the Alarm output range, the Alarm is activated. • Setting range: 0 to 10000 seconds	0 seconds
A1REV NoML (*)	**Alarm Energized/De-energized** • Selects Alarm action Energized/De-energized status. Refer to [Alarm action Energized/De-energized] below. • NoML□ : Energized REVS□ : De-energized	Energized

(*) If any alarm output from 001 (Alarm output; High limit alarm) to 012 (Alarm output; High/Low limits with standby independent) is selected in [Event output EVT2 to EVT5 allocation], their setting characters will be A2xxx to A5xxx.

[Alarm action Energized/De-energized]

When [Alarm Energized (NoML□)] is selected, EVT1 output (terminals 9-10) is conductive (ON) while the EVT1 indicator is lit.
EVT1 output is not conductive (OFF) while EVT1 indicator is not lit.

When [Alarm De-energized (REVS□)] is selected, EVT1 output (terminals 9-10) is not conductive (OFF) while EVT1 indicator is lit.
EVT1 output is conductive (ON) while EVT1 indicator is not lit.

High limit alarm (when Energized is set)

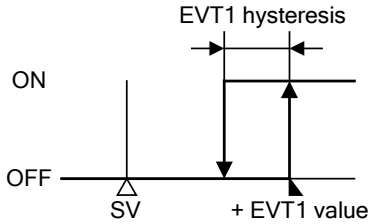

(Fig. 6.3.4-2)

High limit alarm (when De-energized is set)

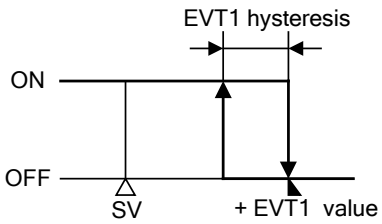

(Fig. 6.3.4-3)

For EVT2 to EVT5, the alarm action is the same as that of EVT1.
For EVT2 to EVT5, read “EVT2 to EVT5” for “EVT1”.
• EVT2 output (terminals 7-8) (A3 option: terminals 8-10)
• EVT3 output (terminals 7-10)
• EVT4 output (terminals 29-30)
• EVT5 output (terminals 28-30)

• **Timer output setting items [When Timer output (013, 014) is selected]**

Available only when the EI option is ordered.

Character	Setting Item, Function, Setting Range	Factory Default
dLYF oN	**Timer output delay action** • Selects a Timer output action. • oN□□□ : ON delay time oFF□□ : OFF delay time oNoFF : ON/OFF delay time • Delay action 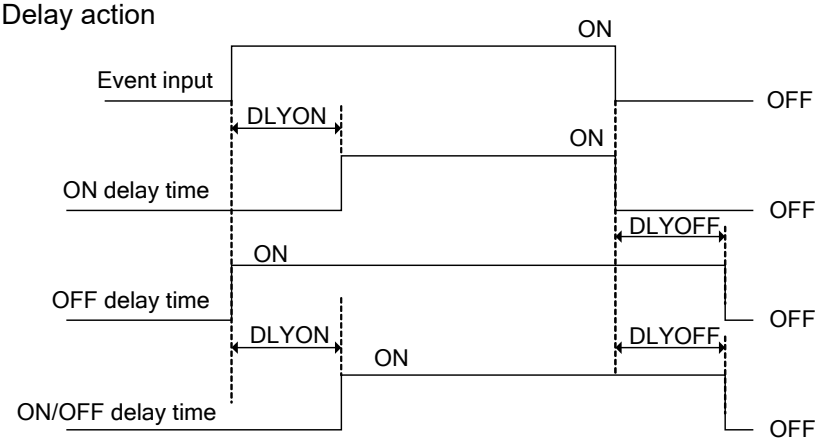 DLYON: ON delay time setting DLYOFF: OFF delay time setting (Fig. 6.3.4-4)	ON delay time
TM_S MIN	**Timer output time unit** •Selects Timer output time unit. • MIN□□: Minutes SEc□□: Seconds	Minutes
dYoFF 0	**OFF delay time** • Sets OFF delay time. • Setting range: 0 to 10000 (Time unit follows the selection in [Timer output time unit].)	0
dYoN 0	**ON delay time** • Sets ON delay time. • Setting range: 0 to 10000 (Time unit follows the selection in [Timer output time unit].)	0

• **Heater burnout alarm output setting items [When Heater burnout alarm output (015) is selected]**

Available only when W, W3 option is ordered.

Character	Setting Item, Function, Setting Range	Factory Default
H_4L 20.0A	**Heater rated current** • Selects heater rated current. • **If heater rated current is changed, Heater burnout alarm 1 and 2 value will return to 0.0.** • 20.0A: 20.0 A 100.0A: 100.0 A	20.0 A
H 0.0 H and CT1 current alternating display (on the PV Display)	**Heater burnout alarm 1 value** • Sets the heater current value for Heater burnout alarm 1. Setting to 0.0 disables the alarm. CT1 current value and character H are indicated alternately on the PV Display. When OUT1 is ON, the CT1 current value is updated. When OUT1 is OFF, the unit memorizes the previous value when OUT1 was ON. Upon returning to set limits, the alarm will stop. • Rated current: 20.0 A (0.0 to 20.0 A), 100.0 A (0.0 to 100.0 A)	0.0 A
H2 0.0 H2 and CT2 current alternating display (on the PV Display)	**Heater burnout alarm 2 value** • Sets the heater current value for Heater burnout alarm 2. Setting to 0.0 disables the alarm. CT2 current value and characters H2 are indicated alternately on the PV Display. When OUT1 is ON, the CT2 current value is updated. When OUT1 is OFF, the unit memorizes the previous value when OUT1 was ON. Upon returning to set limits, the alarm will stop. Available only when W3 option is ordered • Rated current: 20.0 A (0.0 to 20.0 A), 100.0 A (0.0 to 100.0 A)	0.0 A

• **Loop break alarm output setting items [When Loop break alarm output (016) is selected]**

Character	Setting Item, Function, Setting Range	Factory Default
LP_T 0	**Loop break alarm time** • Sets the time to assess the Loop break alarm. • Setting to 0 (zero) disables the alarm. • Setting range: 0 to 200 minutes	0 minutes
LP_H 0	**Loop break alarm band** • Sets the band to assess the Loop break alarm. • Setting to 0 (zero) disables the alarm. • Setting range: 0 to 150℃ (℉), 0.0 to 150.0℃ (℉) DC voltage, current inputs: 0 to 1500 (The placement of the decimal point follows the selection.)	0℃

[Loop break alarm]

When the control action is Reverse (Heating) control:

After MV has reached 100% or the OUT high limit value, and if the PV does not reach the Loop break alarm band setting within the time allotted to assess the Loop break alarm, the alarm output will be turned ON.

Likewise, after MV has reached 0% or the OUT low limit value, and if the PV does not drop to the Loop break alarm band setting within the time allotted to assess the Loop break alarm, the alarm output will be turned ON.

When the control action is Direct (Cooling) control:

After MV has reached 100% or the OUT high limit value, and if the PV does not drop to the Loop break alarm band setting within the time allotted to assess the Loop break alarm, the alarm output will be turned ON.

Likewise, after MV has reached 0% or the OUT low limit value, and if the PV does not reach the Loop break alarm band setting within the time allotted to assess the Loop break alarm, the alarm output will be turned ON.

• **Time signal output setting items [When Time signal output (017) is selected]**

Character	Setting Item, Function, Setting Range	Factory Default
rt_No 1	**Time signal output step** • Sets step number for time signal output performance. • Setting range: 1 to 15	1
rt_oF 00.00	**Time signal output OFF time** • Sets the Time signal output OFF time. • Setting range: 00:00 to 99:59 (Time unit follows the selection in [Step time unit] in the Program group.)	00:00
rt_oN 00.00	**Time signal output ON time** • Sets the Time signal output ON time. • Setting range: 00:00 to 99:59 (Time unit follows the selection in [Step time unit] in the Program group.)	00:00

Time signal output

Time signal output activates during Time signal output ON time within the set step for which Time signal output is performed.
Time signal output ON time follows Time signal output OFF time after the program control starts.
The following program pattern shows that the temperature rises to 200℃ for 1 hour, and stays at 200℃ for 2 hours after program control starts.

Step	1	2
Step SV	200℃	200℃
Step time	1:00	2:00

Time signal output (Fig. 6.3.4-5) is shown when set as follows.
• The step for which Time signal output is performed: 2
• Time signal output OFF time setting: 0:30
• Time signal output ON time setting: 1:00

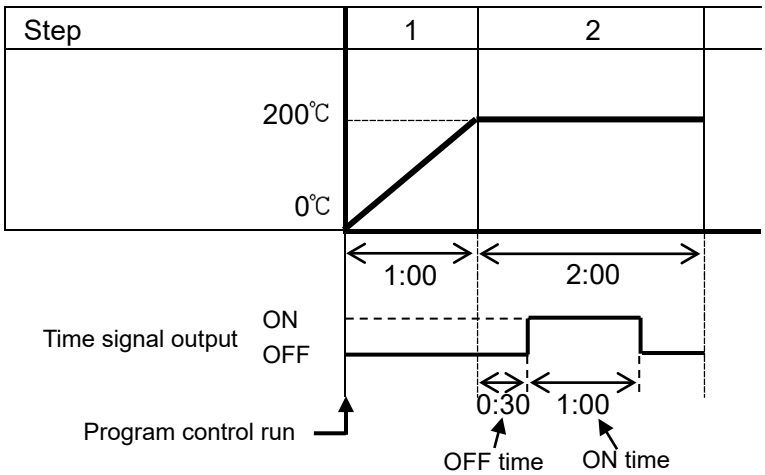

(Fig. 6.3.4-5)

Time signal output is effective within the step set in [Time signal output step].
For example, if Time signal output ON time is set to “2:00” at the above, Time signal output is turned OFF when step 2 is completed.

6.3.5 Program Group

To enter the Program group, follow the procedure below.

(1) G_ENG Set the SET key 4 times in PV/SV Display Mode.
The unit enters the Engineering group.

(2) E_INP Press the MODE key. The unit proceeds to the Input group.

(3) E_PRo Press the SET key multiple times until characters of the Program group appear.

(4) PRGMd FIX Press the MODE key.
The unit proceeds to the 'Fixed value control/Program control'.

Character	Setting Item, Function, Setting Range	Factory Default
PRGMd FIX	**Fixed value control / Program control** • Selects Fixed value control or Program control. • FIX: Fixed value control PRoG: Program control	Fixed value control
M_S MIN	**Step time unit** • Selects the step time unit for the program control. • Available only for the program control. • MIN: Hours:Minutes SEC: Minutes:Seconds	Hours:Minutes
PREF StoP	**Power restore action** • Selects the program status if a power failure occurs mid-program and it is restored. • Available only for the program control • StoP: Stops (in standby) after power is restored. conT: Continues (resumes) after power is restored. HoLd: Suspends (on hold) after power is restored.	Stops (in standby) after power is restored.
S_SV 0	**Program start temperature** • Sets the step temperature when program starts. • Available only for the program control • Setting range: Scaling low limit value to Scaling high limit value	0℃

6.3.6 Communication Group

Available when C, C5 option is ordered.

To enter the Communication group, follow the procedure below.

(1) G_ENG Set the SET key 4 times in PV/SV Display Mode.
The unit enters the Engineering group.

(2) E_INP Press the MODE key. The unit proceeds to the Input group.

(3) E_coM Press the SET key multiple times until characters of the Communication group appear.

(4) cMtL NoML Press the MODE key.
The unit proceeds to the 'Communication protocol'.

Character	Setting Item, Function, Setting Range	Factory Default
cMtL NoML	**Communication protocol** • Selects communication protocol. • NoML: Shinko protocol ModA: MODBUS ASCII mode ModR: MODBUS RTU mode	Shinko protocol
cMNo 0	**Instrument number** • Sets the instrument number. The instrument numbers should be set one by one when multiple instruments are connected in Serial communication, otherwise communication is impossible. • Setting range: 0 to 95	0
cMtP 96	**Communication speed** • Selects a communication speed equal to that of the host computer. • 96 : 9600 bps 192 : 19200 bps 384 : 38400 bps	9600 bps
cMFt 7EVN	**Data bit/Parity** • Selects data bit and parity. • 8NoN: 8 bits/No parity 7NoN: 7 bits/No parity 8EVN: 8 bits/Even 7EVN: 7 bits/Even 8odd: 8 bits/Odd 7odd: 7 bits/Odd	7 bits/Even
StoP 1	**Stop bit** • Selects the stop bit. • 1: 1 2: 2	1

Character	Setting Item, Function, Setting Range	Factory Default
SV_b 0	**SVTC bias** • SV adds SVTC bias value to the value received via SV digital transmission (SVTC command). Available only when Shinko protocol is selected in [Communication protocol]. • Setting range: Converted value of ±20% of input span DC voltage, current inputs: ±20% of scaling span (The placement of the decimal point follows the selection.)	0℃

6.3.7 External Setting Group

Available only when the EA□ or EV□ option is ordered.

To enter the External setting group, follow the procedure below.

(1) G_ENG Set the SET key 4 times in PV/SV Display Mode.
The unit enters the Engineering group.

(2) E_INP Press the MODE key. The unit proceeds to the Input group.

(3) E_EXT Press the SET key multiple times until characters of the External setting group appear.

(4) REMOT LOCAL Press the MODE key.
The unit proceeds to the 'Remote/Local'.

Character	Setting Item, Function, Setting Range	Factory Default
REMOT LOCAL	**Remote/Local** • Selects Remote or Local setting of the SV. • LOCAL : Local (The SV can be set by front keypad.) REMOT : Remote (The SV can be set in analog by the remote operation externally.)	Local
RTLH 1370	**External setting input high limit** • Sets External setting input high limit value. [For EA1 (4-20 mA) option, the value corresponds to 20 mA input.] • Setting range: External setting input low limit to Input range high limit (The placement of the decimal point follows the selection.)	1370℃
RTLL -200	**External setting input low limit** • Sets External setting input low limit value. [For EA1 (4-20 mA) option, the value corresponds to 4 mA input.] • Setting range: Input range low limit to External setting input high limit (The placement of the decimal point follows the selection.)	-200℃
RT_b 0	**Remote bias** • During remote action, SV adds the remote bias value. • Setting range: Converted value of ±20% of input span DC voltage, current inputs: ±20% of scaling span (The placement of the decimal point follows the selection.)	0℃

6.3.8 Transmission Output Group

Available only when TA1 or TV1 option is ordered.

To enter the Transmission output group, follow the procedure below.

(1) G_ENG Set the SET key 4 times in PV/SV Display Mode.
The unit enters the Engineering group.

(2) E_INP Press the MODE key. The unit proceeds to the Input group.

(3) E_TRA Press the SET key multiple times until characters of the Transmission output group appear.

(4) TRoS PV Press the MODE key.
The unit proceeds to the 'Transmission output type'.

Character	Setting Item, Function, Setting Range	Factory Default
TRoS PV	**Transmission output type** • Selects transmission output type. • PV: PV transmission SV: SV transmission MV: MV transmission dV: DV transmission	PV transmission
TRLH 1370	**Transmission output high limit** • Sets the Transmission output high limit value. [For TA1 (4-20 mA) option, the value correponds to 20 mA output.] • Setting range: PV, SV transmission: Transmission output low limit to Input range high limit value MV transmission: Transmission output low limit value to 105.0% DV transmission: Transmission output low limit to Scaling span	1370℃
TRLL -200	**Transmission output low limit** • Sets the Transmission output low limit value. [For TA1 (4-20mA) option, the value correponds to 4mA output.] • Setting range: PV, SV transmission: Input range low limit to Transmission output high limit value MV transmission: -5.0% to Transmission output high limit value DV transmission: -Scaling span to Transmission output high limit value	-200℃

6.3.9 Other Function Group

To enter Other function group, follow the procedure below.

(1) G_ENG Set the SET key 4 times in PV/SV Display Mode.
The unit enters the Engineering group.

(2) E_INP Press the MODE key. The unit proceeds to the Input group.

(3) E_oTH Press the SET key multiple times until characters of Other function group appear, or press the A/M B.MODE key.

(4) Lock ----- Press the MODE key.
The unit proceeds to the 'Set value lock'.

Character	Setting Item, Function, Setting Range	Factory Default
Lock -----	**Set value lock** • Locks the set values to prevent setting errors. The setting item to be locked depends on the selection. • When any selection from Lock 1 to Lock 4 is made, AT or Auto-reset cannot be carried out. • ----- (Unlock): All set values can be changed. Loc 1 (Lock 1): None of the set values can be changed. Loc2 (Lock 2): Only SV can be changed. Loc3 (Lock 3): None of the set values can be changed as Lock 1. Loc4 (Lock 4): SV and Alarm value can be changed. Other set values cannot be changed.	Unlock
PI dZN NoNE	**PID zone function** • Selects "Not used/Used" of the PID zone function. Control is performed by automatic change of PID zone parameters, which are linked to the SV (or step SV for program control). PID zone value can be set in the PID group. Refer to [PID zone function] on p. 49. • NoNE: Not used USE: Used	Not used
RAtU 0	**SV rise rate** • Sets SV rise rate (rising value for 1 minute). When the SV is adjusted, it approaches the new SV by the preset rate-of-change (℃/minute, ℉/ minute). When the power is turned on, the control starts from the PV and approaches the SV by the rate-of-change. • Setting to 0 or 0.0 disables this function. • Setting range: 0 to10000 ℃/ minute (℉/minute) Thermocouple, RTD inputs with a decimal point: 0.0 to1000.0 ℃/minute (℉/minute) DC voltage, current inputs: 0 to 10000/minute (The placement of the decimal point follows the selection.)	0 ℃/minute

Character	Setting Item, Function, Setting Range	Factory Default
RAtd 0	**SV fall rate** • Sets SV fall rate (falling value for 1 minute). When the SV is adjusted, it approaches the new SV by the preset rate-of-change (℃/min, ℉/min). When the power is turned on, the control starts from the PV, and approaches the SV by the rate-of-change. Setting to 0 or 0.0 disables this function. • Setting range: 0 to10000 ℃/min (℉/min) Thermocouple, RTD inputs with a decimal point: 0.0 to 1000.0 ℃/min(℉/min) DC voltage, current inputs: 0 to 10000/min (The placement of the decimal point follows the selection.)	0 ℃/minute
PLV oFF	**Indication when output OFF** • Selects the indication when control output is OFF. • oFF: OFF indication AoFF: No indication PV: PV indication PVAL: PV indication + Any event output from EVT1 to EVT5	OFF indication
bKLt ALL	**Backlight selection** • Selects the display to backlight. • ALL: All (Displays and indicators) are backlit. PV: PV Display is backlit. SV: SV/MV/TIME + MV/DV Bar Graph Displays are backlit. Ac: Action indicators are backlit. PVSV: PV + SV/MV/TIME + MV/DV Bar Graph Displays are backlit. PVAc: PV Display + Action indicators are backlit. SVAc: SV/MV/TIME + MV/DV Bar Graph Displays + Action indicators are backlit.	All are backlit.
coLR REd	**PV color** • Selects PV Display color. See [PV Display color selection] on p.50. • GRN: Green REd: Red oRG: Orange ALGR: When any alarm output from EVT1 to EVT5 is ON, PV color turns from green to red. ALoR: When any alarm output from EVT1 to EVT5 is ON, PV color turns from orange to red. PVGR: PV color changes continuously (Orange → Green → Red). APGR: PV color changes continuously (Orange → Green → Red), + Any alarm output from EVT1 to EVT5 is ON (Red).	Red
cLRG 5.0	**PV color range** • When PVGR or APGR is selected in [PV color], the value of green PV color range can be set. See [PV Display color selection] on p.50. • Setting range: 0.1 to 200.0℃ (℉), DC voltage, current inputs: 1 to 2000 (The placement of the decimal point follows the selection.)	5.0℃

Character	Setting Item, Function, Setting Range	Factory Default
dPTM 0	**Backlight time** • Sets time to backlight from no operation status until backlight is switched off. When set to 0, the backlight remains ON. Backlight relights by pressing any key while backlight is OFF. • Setting range: 0 to 99 minutes	0 minutes
bARGL MV	**Bar graph** • Selects the MV or DV indication on the bar graph. (See p.51.) • MV: MV indication dV: DV indication NoNE: No indication	MV indication
dVWI d 1	**Deviation unit** • Sets amount of deviation for the positive (or negative) side of one division of the bar graph. (See p.51.) • Setting range: 1 to Converted value of 20% of input span	1℃

[PID zone function]

When PID zone function "Used" is selected, and if SV (or Step SV for the program control) is lower than PID zone value, the control is performed with PID zone parameters of the relevant PID zone value.
If the next PID zone value is lower than the current one, the next PID zone parameters will not be effective.
During program control, the currently performing step SV is applicable to the PID zone.
In the case of (Fig. 6.3.9-1), "SV: 150℃" is higher than "PID zone value 1: 100℃", and lower than "PID zone value 2: 200℃", so control is performed using PID zone parameters of PID zone value 2.
As PID zone value 4 has not been set, even in the case SV is higher than PID zone value 3, control is performed using PID zone parameters of PID zone value 3.

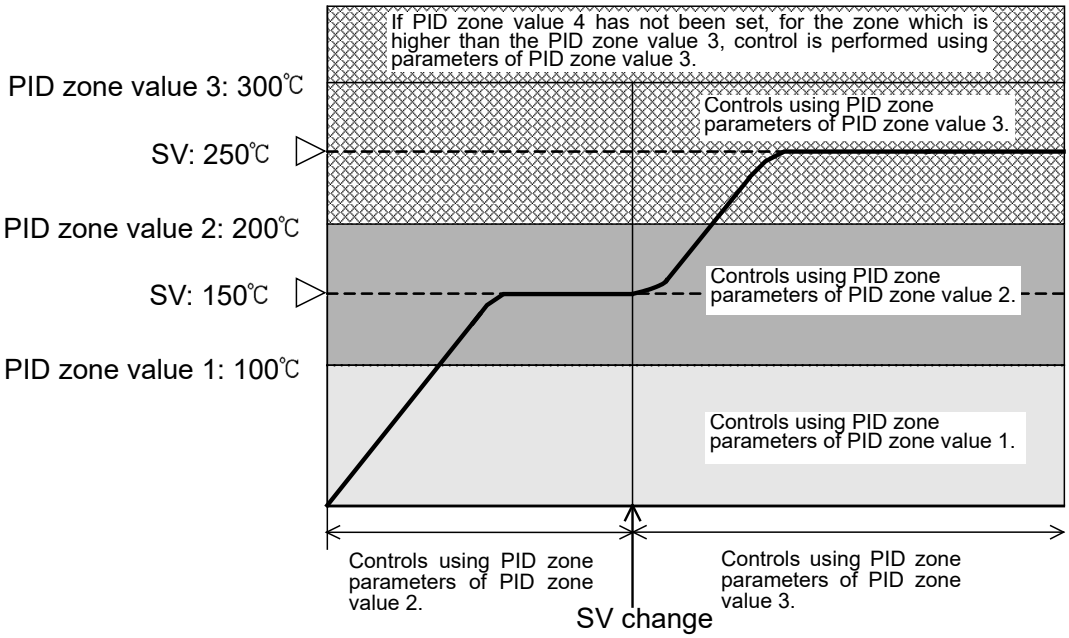

(Fig. 6.3.9-1)

[PV Display color selection]
(Table 6.3.9-1)

PV Color Selection	PV Color
GRN□: Green	Constantly green
REd□: Red	Constantly red
oRG□: Orange	Constantly orange
ALGR□: When any alarm output from EVT1 to EVT5 is ON: Green → Red (*)	When alarm output OFF: Green When any alarm output from EVT1 to EVT5 is ON, the PV color turns from green to red.
ALoR□: When any alarm output from EVT1 to EVT5 is ON: Orange → Red (*)	When alarm output OFF: Orange When any alarm output from EVT1 to EVT5 is ON, the PV color turns from orange to red.
PVGR□: PV color changes continuously (Orange → Green → Red).	PV color changes depending on the color range setting. • PV is lower than [SV-PV color range]: Orange • PV is within [SV±PV color range]: Green • PV is higher than [SV+PV color range]: Red 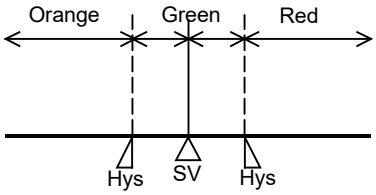 Hys: Set point of PV color range (Fig. 6.3.9-2)
APGR□ PV color changes continuously (Orange → Green → Red) + Any alarm output from EVT1 to EVT5 is ON (Red). (*)	PV color changes depending on the PV color range setting. When any alarm output from EVT1 to EVT5 is ON, the PV Display turns red. • PV is lower than [SV-PV color range]: Orange • PV is within [SV±PV color range]: Green • PV is higher than [SV+PV color range]: Red • Any alarm output from EVT1 to EVT5 is ON: Red 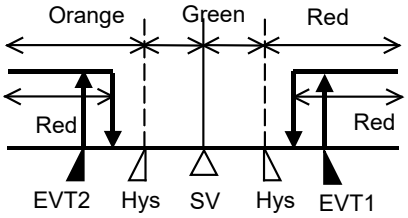 Hys: Set point of PV color range EVT1: EVT1 value (High limit alarm) EVT2: EVT2 value (Low limit alarm) (Fig. 6.3.9-3)

(*) Available for Event output EVT1 to EVT5 allocations 001 to 012.
Not available for Event output allocations from 013 to 019. (See pages 34-36)

[Bar Graph Indication]

MV or DV are indicated on the bar graph.

With MV indication, if Heating/Cooling control output is ordered, bar graph indication for OUT1 MV and OUT2 MV differs as shown below.

Function	Contents	Indication
MV indication	Scale is -5 to 105%, and segments light increasingly to the right in accordance with the OUT1 MV.	(e.g.) OUT1 MV 50% -5% 50% 105% Lights increasingly to the right in accordance with the OUT1 MV.
MV indication (when Heating/ Cooling control output is ordered.)	Scale shows that center is 0%, the right end (OUT1 MV) is 105%, and the left end (OUT2 MV) is 105%. Segments for OUT1 MV light increasingly to the right from the center. Segments for OUT2 MV light increasingly to the left from the center.	(e.g.) OUT1 MV 50% 105% 0% 105% Light increasingly to the right in accordance with the OUT1 MV. (e.g.) OUT2 MV 50% 105% 0% 105% Light increasingly to the left in accordance with the OUT2 MV.
DV indication	In the case of deviation zero (0), central 2 segments light. For positive deviation, segments light increasingly to the right. For negative deviation, segments light increasingly to the left.	When deviation unit is set to 1: (e.g.) Deviation 0 (SV=200, PV=200) - 0 + Central 2 segments light. (e.g.) Negaitve deviation (SV=200, PV=196) - 0 + 4 segments of deviation except the central segment light increasingly to the left in accordance with the deviation.

7. Settings

There are 2 setting methods for this controller: Simplified setting, Group selection.

7.1 Simplified Setting Method

Simplified setting method, which is effective for the Fixed value control, is the same method as when setting standard Shinko controllers.

7.1.1 SV Setting Mode

To enter the SV setting mode, press the MODE key in PV/SV Display Mode.
If 'Set value memory' is selected in [Event input allocation], only the memory number selected by terminal connection can be set.
To set other Set value memory number, select it again by connecting terminals.

Character	Setting Item, Function, Setting Range	Factory Default
S 0 MEMO 1	**SV** • Sets SV. • Setting range: Scaling low limit to Scaling high limit	0℃

7.1.2 Event Setting Mode

To enter Event setting mode, press the △ and MODE keys (in that order) together in PV/SV Display Mode.
If 'Set value memory' is selected in [Event input allocation], only the memory number selected by terminal connection can be set.
To set other Set value memory number, select it again by connecting terminals.

Character	Setting Item, Function, Setting Range	Factory Default
A1 0 MEMO 1	**EVT1 alarm value** • Sets EVT1 alarm value. If the independent alarm (High/Low limits independent, High/Low limit range independent, or High/Low limits with standby independent) is selected in [Event output EVT1 allocation], the EVT1 alarm value matches the EVT1 low limit alarm value. **Setting the value to 0 or 0.0 disables this alarm (except Process high and Process low alarm)**. Not available if No event is selected. Available when the Alarm output is selected in [Event output EVT1 allocation]. • Setting range: Refer to (Table 7.1.2-1) on p.55.	0℃
A1H 0 MEMO 1	**EVT1 high limit alarm value** • Sets EVT1 high limit alarm value. **Setting the value to 0 or 0.0 disables this alarm (except Process high and Process low alarm)**. Available when the independent alarm (High/Low limits independent, High/Low limit range independent, or High/Low limits with standby independent) is selected in [Event output EVT1 allocation]. • Setting range: Refer to (Table 7.1.2-1) on p.55.	0℃

Character	Setting Item, Function, Setting Range	Factory Default
A2	**EVT2 alarm value** • Sets EVT2 alarm value. If the independent alarm (High/Low limits independent, High/Low limit range independent, or High/Low limits with standby independent) is selected in [Event output EVT2 allocation], the EVT2 alarm value matches the EVT2 low limit alarm value. **Setting the value to 0 or 0.0 disables this alarm (except Process high and Process low alarm)**. Not available if No event is selected. Available when the Alarm output is selected in [Event output EVT2 allocation]. • Setting range: Refer to (Table 7.1.2-1) on p.55.	0℃
A2H	**EVT2 high limit alarm value** • Sets EVT2 high limit alarm value. **Setting the value to 0 or 0.0 disables this alarm (except Process high and Process low alarm)**. Available when the independent alarm (High/Low limits independent, High/Low limit range independent, or High/Low limits with standby independent) is selected in [Event output EVT2 allocation]. • Setting range: Refer to (Table 7.1.2-1) on p.55.	0℃
A3	**EVT3 alarm value** • Sets EVT3 alarm value. If the independent alarm (High/Low limits independent, High/Low limit range independent, or High/Low limits with standby independent) is selected in [Event output EVT3 allocation], the EVT3 alarm value matches the EVT3 low limit alarm value. **Setting the value to 0 or 0.0 disables this alarm (except Process high and Process low alarm).** Not available if No event is selected. Available when the Alarm output is selected in [Event output EVT3 allocation]. • Setting range: Refer to (Table 7.1.2-1) on p.55.	0℃
A3H	**EVT3 high limit alarm value** • Sets EVT3 high limit alarm value. **Setting the value to 0 or 0.0 disables this alarm (except Process high and Process low alarm)**. Available when the independent alarm (High/Low limits independent, High/Low limit range independent, or High/Low limits with standby independent) is selected in [Event output EVT3 allocation]. • Setting range: Refer to (Table 7.1.2-1) on p.55.	0℃

Character	Setting Item, Function, Setting Range	Factory Default
A4 0	**EVT4 alarm value** • Sets EVT4 alarm value. If the independent alarm (High/Low limits independent, High/Low limit range independent, or High/Low limits with standby independent) is selected in [Event output EVT4 allocation], the EVT4 alarm value matches the EVT4 low limit alarm value. **Setting the value to 0 or 0.0 disables this alarm (except Process high and Process low alarm)**. Not available if No event is selected. Available when the Alarm output is selected in [Event output EVT4 allocation]. • Setting range: Refer to (Table 7.1.2-1) on p.55.	0℃
A4H 0	**EVT4 high limit alarm value** • Sets EVT4 high limit alarm value. **Setting the value to 0 or 0.0 disables this alarm (except Process high and Process low alarm)**. Available when the independent alarm (High/Low limits independent, High/Low limit range independent, or High/Low limits with standby independent) is selected in [Event output EVT4 allocation]. • Setting range: Refer to (Table 7.1.2-1) on p.55.	0℃
A5 0	**EVT5 alarm value** • Sets EVT5 alarm value. If the independent alarm (High/Low limits independent, High/Low limit range independent, or High/Low limits with standby independent) is selected in [Event output EVT5 allocation], the EVT5 alarm value matches the EVT5 low limit alarm value. **Setting the value to 0 or 0.0 disables this alarm (except Process high and Process low alarm)**. Not available if No event is selected. Available when the Alarm output is selected in [Event output EVT5 allocation]. • Setting range: Refer to (Table 7.1.2-1) on p.55.	0℃
A5H 0	**EVT5 high limit alarm value** • Sets EVT5 high limit alarm value. **Setting the value to 0 or 0.0 disables this alarm (except Process high and Process low alarm)**. Available when the independent alarm (High/Low limits independent, High/Low limit range independent, or High/Low limits with standby independent) is selected in [Event output EVT5 allocation]. • Setting range: Refer to (Table 7.1.2-1) on p.55.	0℃

(Table 7.1.2-1)

Alarm Type	Setting Range
High limit alarm (deviation setting)	-(Input span) to input span ℃ (℉) *1
Low limit alarm (deviation setting)	-(Input span) to input span ℃ (℉) *1
High/Low limits alarm (deviation setting)	0 to input span ℃ (℉) *1
High/Low limits independent alarm (deviation setting)	0 to input span ℃ (℉) *1
High/Low limit range alarm (deviation setting)	0 to input span ℃ (℉) *1
High/Low limit range independent alarm (deviation setting)	0 to input span ℃ (℉) *1
Process high alarm	Input range low limit to input range high limit value *2
Process low alarm	Input range low limit to input range high limit value *2
High limit with standby alarm (deviation setting)	-(Input span) to input span ℃ (℉) *1
Low limit with standby alarm (deviation setting)	-(Input span) to input span ℃ (℉) *1
High/Low limits with standby alarm (deviation setting)	0 to input span ℃ (℉) *1
High/Low limits with standby independent alarm (deviation setting)	0 to input span ℃ (℉) *1

*1 For DC voltage, current inputs, the input span is the same as the scaling span.
*2 For DC voltage, current inputs, input range low (or high) limit value is the same as scaling low (or high) limit value.

7.1.3 PID Setting Mode

To enter PID setting mode, press and hold the ▽ and MODE keys (in that order) together for 3 seconds in PV/SV Display Mode.

If PID zone function “Used” is selected, settable PID zone parameters depends on the SV.

PID zone numbers are indicated on the MEMO/STEP Display.

Character	Setting Item, Function, Setting Range	Factory Default
P 10	**OUT1 proportional band** • Sets the proportional band for OUT1. OUT1 becomes ON/OFF control when set to 0 or 0.0. • Setting range: 0 to Input span ℃ (℉) (DC voltage, current inputs: 0.0 to 1000.0%)	10℃
P_b 1.0	**OUT2 proportional band** • Sets the proportional band for OUT2. OUT2 becomes ON/OFF control when set to 0.0. Available when the D□ option is ordered. Not available if OUT1 is in ON/OFF control. • Setting range: 0.0 to 10.0 times (Multiplied value of OUT1 proportional band)	1.0 times
I 200	**Integral time** • Sets integral time for OUT1. Setting the value to 0 disables this function. Not available if OUT1 is in ON/OFF control. Auto-reset can be performed when PD is control action (I=0). • Setting range: 0 to 3600 seconds	200 seconds
d 50	**Derivative time** • Sets derivative time for OUT1. Setting the value to 0 disables this function. Not available if OUT1 is in ON/OFF control. • Setting range: 0 to 1800 seconds	50 seconds
ARW 50	**ARW** • Sets anti-reset windup (ARW) for OUT1. Available only when PID is control action. • Setting range: 0 to 100%	50%
RSET 0.0	**Manual reset** • Sets the reset value manually. Available only when P or PD is control action. • Setting range: ±1000.0 DC voltage, current inputs: The placement of the decimal point follows the selection.	0.0℃

Character	Setting Item, Function, Setting Range	Factory Default
oRAr 0	**OUT1 rate-of-change** • Sets changing value of OUT1 MV for 1 second. Setting the value to 0 disables this function. Not available if OUT1 is in ON/OFF control. See “OUT1 rate-of-change” below. • Setting range: 0 to 100 %/second	0 %/second

[OUT1 rate-of-change]

For Heating control, if PV is lower than SV, output is generally turned from OFF to ON as shown in (Fig. 7.1.3-1).

If OUT1 rate-of-change is set, the output can be changed by the rate-of-change (Fig. 7.1.3-2).

This control is suitable for high temperature heaters (which are made from molybdenum, tungsten or platinum, etc., and used at approx. 1500 to 1800℃) which are easily burnt out from turning on electricity rapidly.

● **Usual output** ● **Output when Output rate-of-change is set**

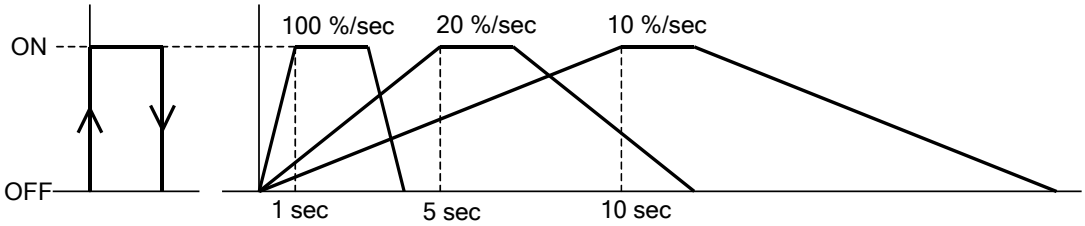

(Fig. 7.1.3-1) (Fig. 7.1.3-2)

7.2 Group Selection

There are 4 groups to be set for the controller; ‘SV, Event group’, PID group, AT group and Engineering group.

Select a group with the SET key, and set each item in the group with the MODE key.

PV Display	Group	Setting Items
G_S	• ‘SV, Event group’ (Fixed value control)	• SV, Event (EVT1 to EVT5) (for Fixed value control)
	• Program pattern group (Program control)	• Step SV, Step time, Wait value, Event (EVT1 to EVT5) (for Program control)
G_PID	PID group	PID parameters
G_AT	AT group	AT/Auto-reset Perform/Cancel, AT bias
G_ENG	Engineering group	Input parameters, Output parameters, Event output parameters, Program parameters, Other functions

For details of the Engineering group, see pages 26 to 51.

7.2.1 SV, Event Group (for Fixed Value Control)

Sets SV, Event (EVT1 to EVT5) in this group.

If ‘Set value memory’ is selected in [Event input allocation], setting items in this group can be set for the selected memory numbers.

To enter the ‘SV, Event group’, follow the procedure below.

(1) G_S Press the SET key in PV/SV Display Mode.
The unit proceeds to the ‘SV, Event group’.

(2) S 0 Press the MODE key. The unit proceeds to the ‘SV1’.

Character	Setting Item, Function, Setting Range	Factory Default
S 0	**SV1** • Sets SV1. • Setting range: Scaling low limit to Scaling high limit	0℃
A1 0	**EVT1 alarm value** • Sets EVT1 alarm value. If the independent alarm (High/Low limits independent, High/Low limit range independent, or High/Low limits with standby independent) is selected in [Event output EVT1 allocation], the EVT1 alarm value matches the EVT1 low limit alarm value. **Setting the value to 0 or 0.0 disables this alarm (except Process high and low alarm)**. Not available if No event is selected in [Event output EVT1 allocation]. Available when the Alarm output is selected in [Event output EVT1 allocation]. • Setting range: Refer to (Table 7.1.2-1) on p.55.	0℃

Character	Setting Item, Function, Setting Range	Factory Default
A1H 0	**EVT1 high limit alarm value** • Sets EVT1 high limit alarm value. **Setting the value to 0 or 0.0 disables this alarm (except Process high and Process low alarm)**. Available when the independent alarm (High/Low limits independent, High/Low limit range independent, or High/Low limits with standby independent) is selected in [Event output EVT1 allocation]. • Setting range: Refer to (Table 7.1.2-1) on p. 55.	0℃
A2 0	**EVT2 alarm value** • Sets EVT2 alarm value. If the independent alarm (High/Low limits independent, High/Low limit range independent, or High/Low limits with standby independent) is selected in [Event output EVT2 allocation], the EVT2 alarm value matches the EVT2 low limit alarm value. **Setting the value to 0 or 0.0 disables this alarm (except Process high and Process low alarm)**. Not available if No event is selected in [Event output EVT2 allocation]. Available when the Alarm output is selected in [Event output EVT2 allocation]. • Setting range: Refer to (Table 7.1.2-1) on p. 55.	0℃
A2H 0	**EVT2 high limit alarm value** • Sets EVT2 high limit alarm value. **Setting the value to 0 or 0.0 disables this alarm (except Process high and Process low alarm)**. Available when the independent alarm (High/Low limits independent, High/Low limit range independent, or High/Low limits with standby independent) is selected in [Event output EVT2 allocation]. • Setting range: Refer to (Table 7.1.2-1) on p. 55.	0℃
A3 0	**EVT3 alarm value** • Sets EVT3 alarm value. If the independent alarm (High/Low limits independent, High/Low limit range independent, or High/Low limits with standby independent) is selected in [Event output EVT3 allocation], the EVT3 alarm value matches the EVT3 low limit alarm value. **Setting the value to 0 or 0.0 disables this alarm (except Process high and Process low alarm)**. Not available if No event is selected in [Event output EVT3 allocation]. Available when the Alarm output is selected in [Event output EVT3 allocation]. • Setting range: Refer to (Table 7.1.2-1) on p. 55.	0℃
A3H 0	**EVT3 high limit alarm value** • Sets EVT3 high limit alarm value. **Setting the value to 0 or 0.0 disables this alarm (except Process high and Process low alarm)**. Available when the independent alarm (High/Low limits independent, High/Low limit range independent, or High/Low limits with standby independent) is selected in [Event output EVT3 allocation]. • Setting range: Refer to (Table 7.1.2-1) on p. 55.	0℃

Character	Setting Item, Function, Setting Range	Factory Default
A4 0	**EVT4 alarm value** • Sets EVT4 alarm value. If the independent alarm (High/Low limits independent, High/Low limit range independent, or High/Low limits with standby independent) is selected in [Event output EVT4 allocation], the EVT4 alarm value matches the EVT4 low limit alarm value. **Setting the value to 0 or 0.0 disables this alarm (except Process high and Process low alarm)**. Not available if No event is selected in [Event output EVT4 allocation]. Available when the Alarm output is selected in [Event output EVT4 allocation]. • Setting range: Refer to (Table 7.1.2-1) on p. 55.	0℃
A4H 0	**EVT4 high limit alarm value** • Sets EVT4 high limit alarm value. **Setting the value to 0 or 0.0 disables this alarm (except Process high and Process low alarm)**. Available when the independent alarm (High/Low limits independent, High/Low limit range independent, or High/Low limits with standby independent) is selected in [Event output EVT4 allocation]. • Setting range: Refer to (Table 7.1.2-1) on p. 55.	0℃
A5 0	**EVT5 alarm value** • Sets EVT5 alarm value. If the independent alarm (High/Low limits independent, High/Low limit range independent, or High/Low limits with standby independent) is selected in [Event output EVT5 allocation], the EVT5 alarm value matches the EVT5 low limit alarm value. **Setting the value to 0 or 0.0 disables this alarm (except Process high and Process low alarm)**. Not available if No event is selected in [Event output EVT5 allocation]. Available when the Alarm output is selected in [Event output EVT5 allocation] • Setting range: Refer to (Table 7.1.2-1) on p. 55.	0℃
A5H 0	**EVT5 high limit alarm value** • Sets EVT5 high limit alarm value. **Setting the value to 0 or 0.0 disables this alarm (except Process high and Process low alarm)**. Available when the independent alarm (High/Low limits independent, High/Low limit range independent, or High/Low limits with standby independent) is selected in [Event output EVT5 allocation]. • Setting range: Refer to (Table 7.1.2-1) on p. 55.	0℃
	Up to 15 files of the Set value memory selected in [Event input allocation] can be set.	

ASH 0 MENU 15	**EVT5 high limit alarm value**	0℃
	• Sets EVT5 high limit alarm value. **Setting the value to 0 or 0.0 disables this alarm (except Process high and Process low alarm)**. Available when the independent alarm (High/Low limits independent, High/Low limit range independent, or High/Low limits with standby independent) is selected in [Event output EVT5 allocation]. • Setting range: Refer to (Table 7.1.2-1) on p. 55.	

7.2.2 Program Pattern Group (for Program Control)

Sets Step SV, Step time, Wait value and Event (EVT1 to EVT5) in this group.
A maximum of 15 steps of program pattern can be created.

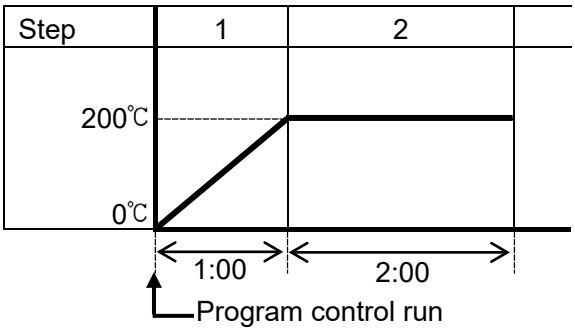

This program pattern shows that the temperature rises to 200℃ for 1 hour, and stays at 200℃ for 2 hours.

In this case, Step 1 SV is 200℃ and Step 1 time is 1 hour.

(Fig. 7.2.2-1)

[Wait function]

While Program control is running, the program cannot proceed to the next step until the deviation between PV and SV enters SV±Wait value at the end of step. The STEP indicator flashes while the Wait function is working.

The Wait function is released on the condition that:

When program pattern is rising: PV is higher than SV- Wait value
When program pattern is falling: PV is lower than SV+ Wait value

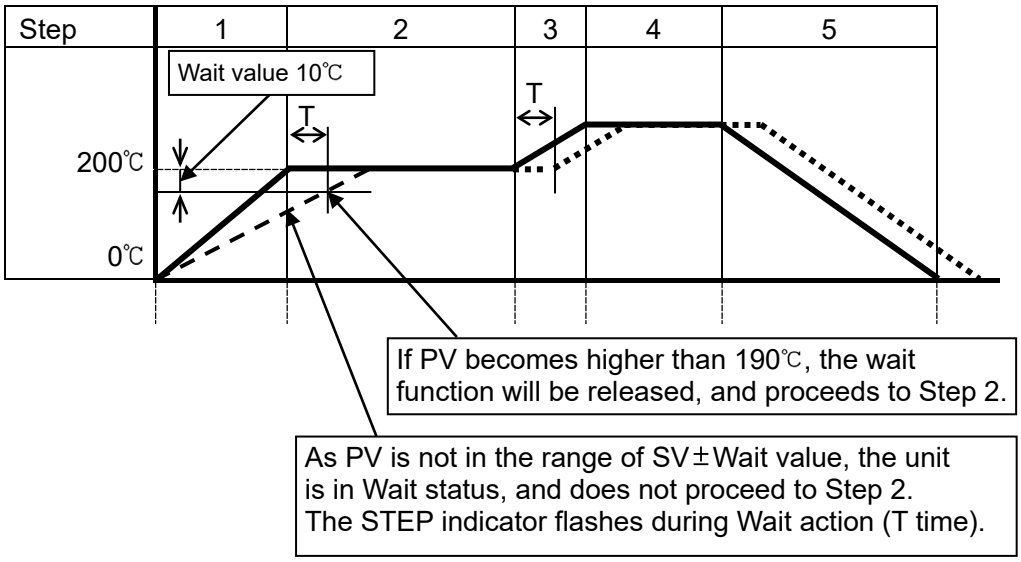

- - - - - : PV
——— : Program pattern
····· : Program pattern delayed by T due to the Wait function

(Fig. 7.2.2-2)

To enter the Program pattern group, follow the procedure below.

(1) 

Press the SET key in PV/SV Display Mode.
The unit proceeds to the Program pattern group.

(2) 

Press the MODE key.
The unit proceeds to 'Step 1 SV'.

Character	Setting Item, Function, Setting Range	Factory Default
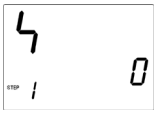	**Step 1 SV** • Sets Step 1 SV. • Setting range: Scaling low limit value to Scaling high limit value	0℃
	**Step 1 time** • Sets Step 1 time. • Setting range: 00:00 to 99:59	00:00
	**Step 1 wait value** • Sets Step 1 wait value. This function prevents the step from proceeding to the next one until PV enters the range of SV±Wait value regardless of the step time. **Setting the value to 0 or 0.0 disables this function.** • Setting range: 0 to Converted value of 20% of input span	0℃
	**Step 1 EVT1 alarm value** • Sets Step1 EVT1 alarm value. If the independent alarm (High/Low limits independent, High/Low limit range independent, or High/Low limits with standby independent) is selected in [Event output EVT1 allocation], the EVT1 alarm value matches the EVT1 low limit alarm value. **Setting the value to 0 or 0.0 disables this alarm (except Process high and Process low alarm).** Not available if No event is selected in [Event output EVT1 allocation]. Available when the Alarm output is selected in [Event output EVT1 allocation]. • Setting range: Refer to (Table 7.1.2-1) on p. 55.	0℃
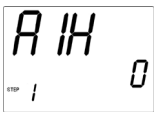	**Step 1 EVT1 high limit alarm value** • Sets Step 1 EVT1 high limit alarm value. **Setting the value to 0 or 0.0 disables this alarm (except Process high and Process low alarm)**. Available when the independent alarm (High/Low limits independent, High/Low limit range independent, or High/Low limits with standby independent) is selected in [Event output EVT1 allocation]. • Setting range: Refer to (Table 7.1.2-1) on p. 55.	0℃

Character	Setting Item, Function, Setting Range	Factory Default
A2 0 STEP 1	**Step 1 EVT2 alarm value** • Sets Step 1 EVT2 alarm value. If the independent alarm (High/Low limits independent, High/Low limit range independent, or High/Low limits with standby independent) is selected in [Event output EVT2 allocation], the EVT2 alarm value matches the EVT2 low limit alarm value. **Setting the value to 0 or 0.0 disables this alarm (except Process high and Process low alarm**). Not available if No event is selected in [Event output EVT2 allocation]. Available when the Alarm output is selected in [Event output EVT2 allocation]. • Setting range: Refer to (Table 7.1.2-1) on p. 55.	0℃
A2H 0 STEP 1	**Step 1 EVT2 high limit alarm value** • Sets Step 1 EVT2 high limit alarm value. **Setting the value to 0 or 0.0 disables this alarm (except Process high and Process low alarm)**. Available when the independent alarm (High/Low limits independent, High/Low limit range independent, or High/Low limits with standby independent) is selected in [Event output EVT2 allocation]. • Setting range: Refer to (Table 7.1.2-1) on p. 55.	0℃
A3 0 STEP 1	**Step 1 EVT3 alarm value** • Sets Step 1 EVT3 alarm value. If the independent alarm (High/Low limits independent, High/Low limit range independent, or High/Low limits with standby independent) is selected in [Event output EVT3 allocation], the EVT3 alarm value matches the EVT3 low limit alarm value. **Setting the value to 0 or 0.0 disables this alarm (except Process high and Process low alarm)**. Not available if No event is selected in [Event output EVT3 allocation]. Available when the Alarm output is selected in [Event output EVT3 allocation]. • Setting range: Refer to (Table 7.1.2-1) on p. 55.	0℃
A3H 0 STEP 1	**Step 1 EVT3 high limit alarm value** • Sets Step 1 EVT3 high limit alarm value. **Setting the value to 0 or 0.0 disables this alarm (except Process high and Process low alarm)**. Available when the independent alarm (High/Low limits independent, High/Low limit range independent, or High/Low limits with standby independent) is selected in [Event output EVT3 allocation]. • Setting range: Refer to (Table 7.1.2-1) on p. 55.	0℃
A4 0 STEP 1	**Step 1 EVT4 alarm value** • Sets Step 1 EVT4 alarm value. If the independent alarm (High/Low limits independent, High/Low limit range independent, or High/Low limits with standby independent) is selected in [Event output EVT4 allocation], the EVT4 alarm value matches the EVT4 low limit alarm value. **Setting the value to 0 or 0.0 disables this alarm (except Process high and Process low alarm)**. Not available if No event is selected in [Event output EVT4 allocation]. Available when the Alarm output is selected in [Event output EVT4 allocation]. • Setting range: Refer to (Table 7.1.2-1) on p. 55.	0℃

Character	Setting Item, Function, Setting Range	Factory Default
A4H 0 STEP 1	**Step 1 EVT4 high limit alarm value** • Sets Step 1 EVT4 high limit alarm value. **Setting the value to 0 or 0.0 disables this alarm (except Process high and Process low alarm)**. Available when the independent alarm (High/Low limits independent, High/Low limit range independent, or High/Low limits with standby independent) is selected in [Event output EVT4 allocation]. • Setting range: Refer to (Table 7.1.2-1) on p. 55.	0℃
A5 0 STEP 1	**Step 1 EVT5 alarm value** • Sets Step 1 EVT5 alarm value. If the independent alarm (High/Low limits independent, High/Low limit range independent, or High/Low limits with standby independent) is selected in [Event output EVT5 allocation], the EVT5 alarm value matches the EVT5 low limit alarm value. **Setting the value to 0 or 0.0 disables this alarm (except Process high and Process low alarm)**. Not available if No event is selected in [Event output EVT5 allocation]. Available when the Alarm output is selected in [Event output EVT5 allocation]. • Setting range: Refer to (Table 7.1.2-1) on p. 55.	0℃
A5H 0 STEP 1	**Step 1 EVT5 high limit alarm value** • Sets Step 1 EVT5 high limit alarm value. **Setting the value to 0 or 0.0 disables this alarm (except Process high and Process low alarm)**. Available when the independent alarm (High/Low limits independent, High/Low limit range independent, or High/Low limits with standby independent) is selected in [Event output EVT5 allocation]. • Setting range: Refer to (Table 7.1.2-1) on p. 55.	0℃
	Step 1 data contains data from “Step 1 SV” to “Step 1 EVT5 high limit alarm value”. Up to Step15 can be set repeatedly.	
A5H 0 STEP 15	**Step 15 EVT5 high limit alarm value** • Sets Step 15 EVT5 high limit alarm value. **Setting the value to 0 or 0.0 disables this alarm (except Process high and Process low alarm)**. Available when the independent alarm (High/Low limits independent, High/Low limit range independent, or High/Low limits with standby independent) is selected in [Event output EVT5 allocation]. • Setting range: Refer to (Table 7.1.2-1) on p. 55.	0℃

Step SV of Steps 1 to 15 correspond to SV of Set value memory numbers 1 to 15.
EVT1 to EVT5 value of Steps 1 to 15 correspond to EVT1 to EVT5 value of Set value memory numbers 1 to 15.

7.2.3 PID Group

PID parameters can be set in this group.
PID group is common to Fixed value control and program control.

To enter the PID group, follow the procedure below.

(1) 

Press the SET key twice in PV/SV Display Mode.
The unit proceeds to the PID group.

(2) 

Press the MODE key.
If PID zone function “Not used” is selected in [PID zone function], the unit will proceed to ‘OUT1 proportional band 1’.
If PID zone function “Used” is selected in [PID zone function], the unit will proceed to ‘PID zone value 1’.

Character	Setting Item, Function, Setting Range	Factory Default
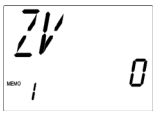	**PID zone value 1** • Sets Reference value 1 to switch PID zone parameters of the PID zone function. (PID zone parameters: OUT1 proportional band 1 to OUT1 rate-of-change 1) Not available if PID zone function “Not used” is selected in [PID zone function]. One zone contains from “PID zone value 1” to “OUT1 rate-of- change 1”. When SV is lower than Reference value 1 (PID zone value 1), control is performed with these PID zone parameters. • Setting range: Scaling low limit value to Scaling high limit value	0℃
	**OUT1 proportional band 1** • Sets proportional band 1 for OUT1. OUT1 becomes ON/OFF control when set to 0 or 0.0. • Setting range: 0 to Input span ℃ (℉) DC voltage, current inputs: 0.0 to 1000.0%	10℃
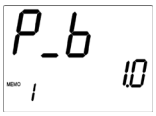	**OUT2 proportional band 1** • Sets proportional band 1 for OUT2. OUT2 becomes ON/OFF control when set to 0.0. Available only when D□ option is ordered. • Setting range: 0.0 to 10.0 times (Multiplied value of OUT1 proportional band)	1.0 times
	**Integral time 1** • Sets integral time 1 for OUT1. Setting the value to 0 disables this function. Auto-reset can be performed when PD is control action (I=0). • Setting range: 0 to 3600 seconds	200 seconds

Character	Setting Item, Function, Setting Range	Factory Default
d 50 MEMO 1	**Derivative time 1** • Sets derivative time 1 for OUT1. Setting the value to 0 disables this function. • Setting range: 0 to 1800 seconds	50 seconds
ARW 50 MEMO 1	**ARW 1** • Sets ARW 1 (anti-reset windup 1) for OUT1. • Setting range: 0 to 100%	50%
RSET 0.0 MEMO 1	**Manual reset 1** • Sets reset value 1 manually. • Setting range: ±1000.0 DC voltage, current inputs: The placement of the decimal point follows the selection.	0.0℃
oRAT 0 MEMO 1	**OUT1 rate-of-change 1** • Sets OUT1 rate-of-change 1 (changing value of OUT1 MV for 1 second). Setting the value to 0 disables this function. See [OUT1 rate-of-change] below. • Setting range: 0 to 100 %/second	0 %/second
	If PID zone function “Used” is selected in [PID zone function], one zone contains data from “PID zone value 1” to “OUT1 rate-of- change 1”. Up to 5 zones can be set repeatedly.	
oRAT 0 MEMO 5	**OUT1 rate-of-change 5** • Sets OUT1 rate-of-change 5 (changing value of OUT1 MV for 1 second). Setting the value to 0 disables this function. See [OUT1 rate-of-change] below. • Setting range: 0 to 100 %/second	0 %/second

[OUT1 rate-of-change]

For Heating control, if PV is lower than SV, output is generally turned from OFF to ON as shown in (Fig. 7.2.3-1). If OUT1 rate-of-change is set, the output can be changed by the rate-of-change (Fig. 7.2.3-2).

This control is suitable for high temperature heaters (which are made from molybdenum, tungsten or platinum, etc., and used at approx. 1500 to 1800℃) which are easily burnt out from turning on electricity rapidly.

● **Usual output** ● **Output when Output rate-of-change is set**

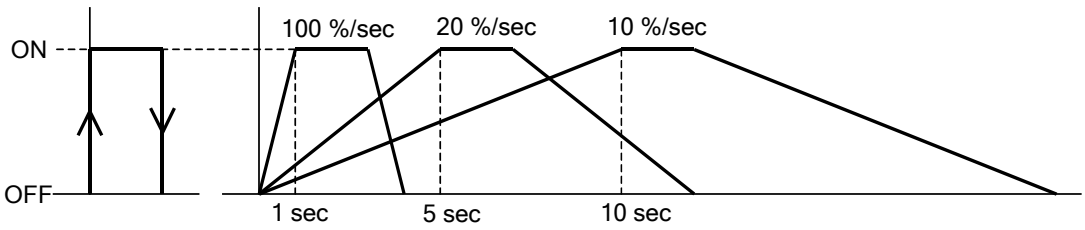

(Fig. 7.2.3-1) (Fig. 7.2.3-2)

7.2.4 AT Group

AT/Auto-reset Perform/Cancel, AT bias can be set in this group.
AT group is common to Fixed value control and program control.
During ON/OFF control or PI control, the unit cannot proceed to any setting items in this group.
If PID zone function “Used” is selected, and if control action of the PID zone number (used for control) is ON/OFF or PI, the unit cannot proceed to any setting items in this group.

To enter the AT group, follow the procedure below.

(1) G_AT Press the SET key 3 times in PV/SV Display Mode.
The unit proceeds to the AT group.

(2) AT ----- Press the MODE key.
The unit proceeds to the ‘AT/Auto-reset’.

Character	Setting Item, Function, Setting Range	Factory Default
AT -----	**AT/Auto-reset** • Selects AT Perform/Cancel in PID control, or Auto-reset Perform/Cancel in P control or PD control. • If PID zone function “Used” is selected, values such as P, I, D, ARW of the PID block number (which are used for control) will be changed after AT is finished. • If AT is cancelled during the process, P, I, D and ARW values return to the values before AT was performed. • AT will be forced to stop if it has not been completed within 4 hours. • **Auto-reset is cancelled in approximately 4 minutes. It cannot be released while performing this function.** Auto-reset value will be calculated within the manual reset setting range. • ------: AT/Auto-reset Cancel AT□□□/RSET□: AT/Auto-reset Perform If “AT/Auto-reset Perform” is selected, and if the MODE key is pressed, the unit will return to PV/SV Display Mode.	-----
AT_b 20	**AT bias** • Sets bias value for the AT. Refer to Section “10. AT” on pages 79, 80. Not available for DC voltage, current inputs. • Setting range: 0 to 50℃ (0 to 100℉) With a decimal point: 0.0 to 50.0℃ (0.0 to 100.0℉)	20℃

8. Operation

8.1 Starting Operation

After the unit is mounted to the control panel and wiring is completed, operate the unit following the procedure below.

(1) Turn the power supply to the unit ON.

After the power is turned on, the PV Display indicates the input type, and the SV/MV/TIME Display indicates the input range high limit value (for thermocouple, RTD inputs) or scaling high limit value (for DC voltage, current inputs) for approximately 3 seconds. See (Table 8.1-1).

(Table 8.1-1)

Sensor Input	℃		℉	
	PV Display	SV/MV/TIME Display	PV Display	SV/MV/TIME Display
K	K□□□C	□1370	K□□□F	□2498
	K□□ .C	□400.0	K□□ .F	□752.0
J	J□□□C	□1000	J□□□F	□1832
R	R□□□C	□1760	R□□□F	□3200
S	S□□□C	□1760	S□□□F	□3200
B	b□□□C	□1820	b□□□F	□3308
E	E□□□C	□□800	E□□□F	□1472
T	T□□ .C	□400.0	T□□ .F	□752.0
N	N□□□C	□1300	N□□□F	□2372
PL-Ⅱ	PL2□C	□1390	PL2□F	□2534
C(W/Re5-26)	c□□□C	□2315	c□□□F	□4199
Pt100	Pt□ .C	□850.0	Pt□ .F	1562.0
JPt100	JPt .C	□500.0	JPt .F	□932.0
Pt100	Pt□□C	□□850	Pt□□F	□1562
JPt100	JPt□C	□□500	JPt□F	□□932
Pt100	Pt1 .C	□100.0	Pt2 .F	□212.0
Pt100	Pt5 .C	□500.0	Pt9 .F	□932.0
4 to 20 mA DC	420MA	Scaling high limit value		
0 to 20 mA DC	020MA			
0 to 10 mV DC	□10MV			
-10 to 10 mV DC	-10MV			
0 to 50 mV DC	□50MV			
0 to 100 mV DC	100MV			
0 to 1 V DC	0□1□V			
0 to 5 V DC	0□5□V			
1 to 5 V DC	1□5□V			
0 to 10 V DC	010□V			

During this time, all outputs and indicators are in OFF status.
Control will then start, indicating as follows.

- **Fixed value control status**
  The PV Display indicates PV, and the SV/MV/TIME Display indicates SV.
  The MEMO/STEP Display indicates the memory number if ‘Set value memory’ is selected in [Event input allocation].

- **When Control output OFF function is working**
  The PV Display indicates [oFF]. (Indication depends on the selection in [Indication when output OFF].)
- **Program control standby status**
  The PV Display indicates the PV, and the SV/MV/TIME Display and MEMO/STEP Display are turned off.
- **When program control is operating**
  The PV Display indicates PV, the SV/MV/TIME Display indicates the Step SV, and the MEMO/STEP Display indicates the step number.

(2) Set up the unit.

Refer to Section “6. Setup” (pp. 21-51) and “15. Operation Flowchart” (pp. 127-131).
Setup (setting the Input type, Event output type, Control action, etc.) should be done in the Engineering group before using this controller, according to the user’s conditions.
If the user’s specification is the same as the factory default of the instrument, it is not necessary to set up the controller. Proceed to Step (3).

(3) Input each set value.

Refer to Section “7. Settings” (pp. 52-68) and “15. Operation Flowchart” (pp. 127-131).

(4) Turn the load circuit power ON.

The controller works as follows depending on the control (Fixed value control/Program control).

- **Fixed value control**
  Control action starts so as to keep the control target at the SV.
- **Program control**

Perform program control

To perform Program control, press the RUN/STOP key.
Program control starts (“PV start” is used).

PV start: When the program control starts, the step SV and time are advanced to the PV, and the control starts.

If “Program start temperature” has been set in the Program group, Program control starts from the preset temperature.
While the Wait function is working, the STEP indicator flashes.

Stop program control

To stop Program control, press the RUN/STOP key for 1 second.
Program control stops, and the unit reverts to Program control standby.

Advance function (proceeds to the next step during program operation)

If the △ key is pressed for 1 second during program control, it will interrupt the performing step, and will proceed to the next step. If the Wait function is working, the Wait function will be cancelled, and the unit will proceed to the next step.

Control after power is restored

If power failure occurs during the Program control, then is restored, control will stop (in standby)/continue/suspend depending on the selection in [Power restore action].
To cancel the “Suspends (on hold) after power is restored”, press the RUN/STOP key.

(e.g.) **When setting the SV to 100℃ in the Fixed value control.**

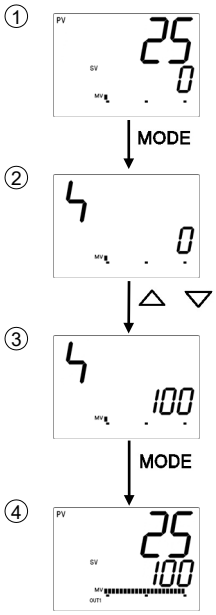

Proceed to SV setting mode.

Press the MODE key in PV/SV Display Mode.
The unit proceeds to the SV setting mode.

Set SV.

Set SV with the △ or ▽ key.

Register the SV.

Press the MODE key to register the SV.
The unit reverts to PV/SV Display Mode.

Control starts.

8.2 Control Output OFF Function

The control action and output of an instrument (or instruments) can be turned OFF without turning OFF their power supplies using this function.
This function is available for Fixed value control.
To turn the control output OFF, press the RUN/STOP key for approximately 1 second in PV/SV Display Mode.
[oFF] is indicated on the PV Display while the function is working.
However, indication on the PV Display depends on the selection in [Indication when output OFF].
Once the control output OFF function is enabled, the function cannot be released even if the power to the instrument is turned OFF and ON again.
To cancel the function, press the RUN/STOP key again for approx. 1 second.

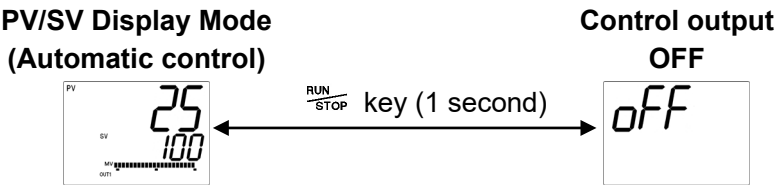

8.3 Switching Auto/Manual Control

By pressing the A/M B.MODE key in PV/SV Display Mode, Auto/Manual control can be switched. If control action is switched from automatic to manual and vice versa, balanceless-bumpless function works to prevent a sudden change of MV.
When automatic control is switched to manual control, the MEMO/STEP Display indicates [M].
The MV can be increased or decreased by pressing the △ or ▽ key to perform the control.
By pressing the A/M B.MODE key again, the unit reverts to PV/SV Display Mode (automatic control).
Whenever the power to the controller is turned on, automatic control starts.

Switching from Automatic to Manual control, and vice versa

PV/SV Display Mode (Automatic control) **Manual control**

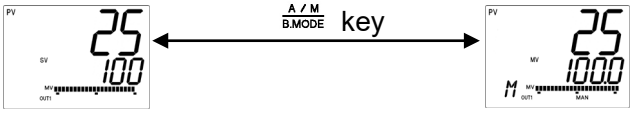

Increases or decreases MV with the △ or ▽ key.

8.4 Indicating MV and Remaining Step Time (Program Control)

To indicate MV, press the MODE key for approximately 3 seconds in PV/SV Display Mode. The SV/MV/TIME Display indicates the output MV, and the MEMO/STEP Display indicates [M].
SV and TIME of the SV/MV/TIME indicator are unlit, and MV of the SV/MV/TIME indicator lights.
If the MODE key is pressed again during Fixed value control, the unit will revert to PV/SV Display Mode.
If the MODE key is pressed during program control, remaining step time is indicated on the SV/MV/TIME Display. SV and MV of the SV/MV/TIME indicator are unlit, and TIME of the SV/MV/TIME indicator lights.
By pressing the MODE key again, the unit reverts to PV/SV Display Mode.

During Fixed value control:

PV/SV Display Mode (Automatic control) **Output MV indication**

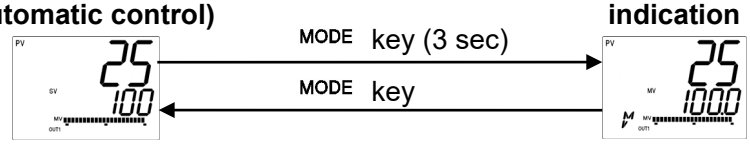

8.5 AT/Auto-reset Perform, AT Cancel

In order to set each value of P, I, D and ARW automatically, the AT process should be made to fluctuate to obtain an optimal value. [See Section “10. AT” (pp. 79, 80.)]
‘AT/Auto-reset Perform’ and ‘AT Cancel’ can be set in [AT/Auto-reset] in AT group.
Auto-reset can be performed when the unit is in P or PD control action. [See Section “9. Auto-reset” (p.78.)]
Auto-reset ends 4 minutes after starting. It cannot be released while performing this function.

How to perform AT/Auto-reset

(1) Press the SET key 3 times in PV/SV Display Mode.
The unit proceeds to the AT group.

(2) Press the MODE key. The unit proceeds to [AT/Auto-reset].

(3) Select AT/Auto-reset "Perform [AT/RESET]" with the △ key, and press the MODE key.
The unit returns to PV/SV Display Mode, and AT/Auto-reset will initiate.
While performing AT/Auto-reset, the AT indicator is flashing.
AT will be forced to stop if it has not been completed within 4 hours.
If Direct/Reverse action is switched during AT (by selecting '003 Direct/Reverse action' in [Event input allocation]), the AT stops.
Auto-reset is cancelled in approximately 4 minutes. It cannot be released while performing this function.

How to cancel AT

(1) Press the SET key 3 times in PV/SV Display Mode.
The unit proceeds to the AT group.

(2) Press the MODE key. The unit proceeds to [AT/Auto-reset].

(3) Select AT/Auto-reset "Cancel [- - - - -]" with the ▽ key, and press the MODE key for 3 seconds. AT will stop, and the unit will revert to PV/SV Display Mode.
If AT is cancelled during this process, each value of P, I, D and ARW reverts to the values before the AT was performed.

AT Perform/Cancel (PID control):

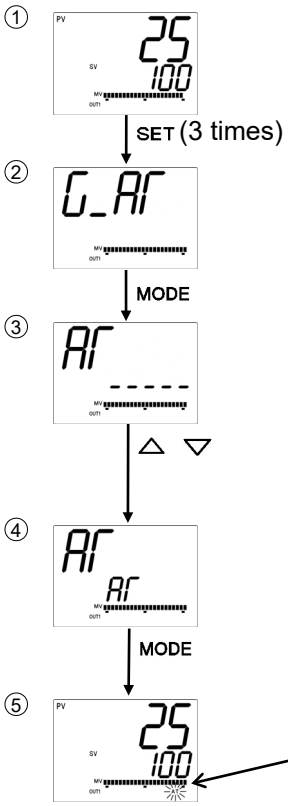

Proceed to the AT group.
Press the SET key 3 times in PV/SV Display Mode.
The unit proceeds to the AT group.

Proceed to [AT/Auto-reset].
Press the MODE key.
The unit proceeds to [AT/Auto-reset].

Select AT Perform/Cancel.
Select "AT (AT Perform)" with the △, or select "- - - - - (AT Cancel)" with the ▽.
- - - - - : AT Cancel
AT : AT Perform

Confirm AT Perform/Cancel.
If "AT Perform" is selected, press the MODE key.
If "AT Cancel" is selected, press the MODE key for 3 seconds. The unit reverts to PV/SV Display Mode.

AT Perform/Cancel
While AT is performing, the AT indicator flashes.
If AT is cancelled. the AT indicator turns off.

8.6 Using Event Output as a High/Low Limits Independent Alarm

To use the Event output as a High/Low limits independent alarm, set as follows.
(e.g.)

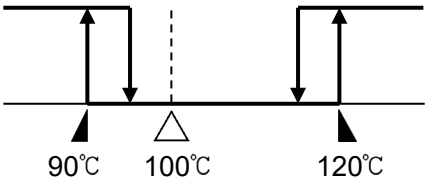

(Fig. 8.6-1)

SV: 100℃
EVT1 (low limit) alarm value: 10℃
EVT1 high limit alarm value: 20℃

(1) Select [Engineering group] – [Event output group] – [Event output EVT1 allocation] – [Alarm output; High/Low limits independent] in order.

①

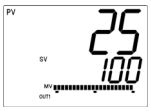

SET (4 times)

Proceed to the Engineering group.
Press the SET key 4 times in PV/SV Display Mode.
The unit proceeds to the Engineering group.

②

MODE

Proceed to the Input group.
Press the MODE key.
The unit proceeds to the Input group.

③

SET (Multiple times)

Proceed to the Event output group.
Press the SET key multiple times until Event output group characters appear.

④

MODE

Proceed to Event output EVT1 allocation.
Press the MODE key.
The unit proceeds to Event output EVT1 allocation.

⑤

△ ▽

Select Event output EVT1 allocation.
Select [004: Alarm output; High/Low limits independent] with the △ or ▽ key.

⑥

MODE

Confirm Event output EVT1 allocation.
Press the MODE key.
The unit proceeds to Event output EVT1 alarm hysteresis.

⑦

MODE

Set Event output EVT1 alarm hysteresis.
Use the △ or ▽ key for settings, and press the MODE key.
The unit proceeds to Event output EVT1 alarm delay time.

⑧

MODE

Set Event output EVT1 alarm delay time.

Use the △ or ▽ for settings, and press the MODE key. The unit proceeds to Event output EVT1 alarm Energized/ De-energized.

⑨

MODE (3 sec)

Select Event output EVT1 alarm Energized/De-energized.

Use the △ or ▽ for selection, and press the MODE key for 3 seconds.

The unit reverts to PV/SV Display Mode.

⑩

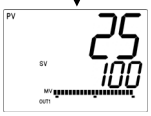

PV/SV Display Mode

(2) Set EVT1 (low limit) alarm value and EVT1 high limit alarm value.

①

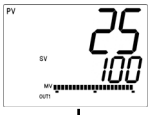

△ + MODE

Proceed to Event setting mode.

Press the △ and MODE keys (in that order) together in PV/SV Display Mode.

The unit proceeds to Event setting mode.

②

△ ▽

Set the EVT1 (low limit) alarm value.

Set the EVT1 (low limit) alarm value with the △ or ▽ key.

③

MODE

Register the EVT1 (low limit) alarm value.

Press the MODE key. The EVT1 (low limit) alarm value is registered, and the unit proceeds to EVT1 high limit alarm value.

④

△ ▽

Set EVT1 high limit alarm value.

Set the EVT1 high limit alarm value with the △ or ▽ key.

⑤

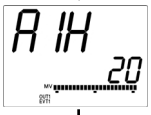

MODE

Register the EVT1 high limit alarm value.

Press the MODE key.

The EVT1 high limit alarm value is registered, and the unit reverts to PV/SV Display Mode.

⑥

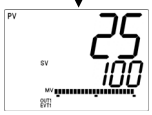

PV/SV Display Mode

8.7 Set Value Memory Function

If ‘Set value memory’ is selected in [Event input EVI1 to EVI4 allocation], memory file numbers can be selected by external operation. Up to 15 files with 13 pieces of data can be memorized. Control can be performed by selecting the desired file number.

In one file, 13 pieces of data are included: SV, Step time, Wait value, EVT1 alarm value, EVT1 high limit alarm value, EVT2 alarm value, EVT2 high limit alarm value, EVT3 alarm value, EVT3 high limit alarm value, EVT4 alarm value, EVT4 high limit alarm value, EVT5 alarm value, EVT5 high limit alarm value.

If ‘Set value memory’ is selected for EVI1 to EVI4 in [Event input EVI1 to EVI4 allocation], the memory number can be set by connecting terminals 11 through 15 as follows.
A maximum of 50 units of controllers can be connected in parallel.

Set value memory numbers by connecting terminals: [●: ON (Closed), X: OFF (Open)]

Set value memory No. / Connecting terminals	1	2	3	4	5	6	7	8	9	10	11	12	13	14	15	(*)
11–15 [DI1(EVI1)-COM]	X	●	X	●	X	●	X	●	X	●	X	●	X	●	X	●
12–15 [DI2(EVI2)-COM]	X	X	●	●	X	X	●	●	X	X	●	●	X	X	●	●
13–15 [DI3(EVI3)-COM]	X	X	X	X	●	●	●	●	X	X	X	X	●	●	●	●
14–15 [DI4(EVI4)-COM]	X	X	X	X	X	X	X	X	●	●	●	●	●	●	●	●

(*) Works as Set value memory number 15.

If ‘Set value memory’ is selected for EVI1 and EVI2 in [Event input EVI1 to EVI4 allocation]: Set value memory number can be selected using terminals 11, 12 and 15 as shown below.

Set value memory numbers by connecting terminals: [●: ON (Closed), X: OFF (Open)]

Set value memory No. / Connecting terminals	1	2	3	4
11–15 [DI1(EVI1)-COM]	X	●	X	●
12–15 [DI2(EVI2)-COM]	X	X	●	●

During setting mode or while AT is performing, memory numbers cannot be changed by connecting terminals.

[Operation procedure]

Simplified setting

(1) Select a Set value memory number by connecting terminals in PV/SV Display Mode.

(2) Set the following values.

- SV (in SV setting mode)
- EVT1 alarm value, EVT1 high limit alarm value, EVT2 alarm value, EVT2 high limit alarm value, EVT3 alarm value, EVT3 high limit alarm value, EVT4 alarm value, EVT4 high limit alarm value, EVT5 alarm value, EVT5 high limit alarm value (in Event setting mode)

Group selection (Fixed value control)

(1) Proceed to the setting item of the desired Set value memory number in the 'SV, Event group'.

(2) Set the following values:
SV, EVT1 alarm value, EVT1 high limit alarm value, EVT2 alarm value, EVT2 high limit alarm value, EVT3 alarm value, EVT3 high limit alarm value, EVT4 alarm value, EVT4 high limit alarm value, EVT5 alarm value, EVT5 high limit alarm value

[Registration complete]

- Data is registered in the file number indicated by the MEMO/STEP Display.
- When any number is retrieved by connecting terminals, the selected number will be indicated, and the control is performed using the data (set values) of the indicated file number.
- To change the set values, repeat [Operation procedure] on the previous page.

9. Auto-reset

Auto-reset is performed to correct the offset at the point at which PV indication is stabilized within the proportional band during the PD control. Since the corrected value is internally memorized, it is not necessary to perform the auto-reset again as long as the process is the same.

However, when OUT1 proportional band (P) is set to 0 or 0.0, the corrected value is cleared.

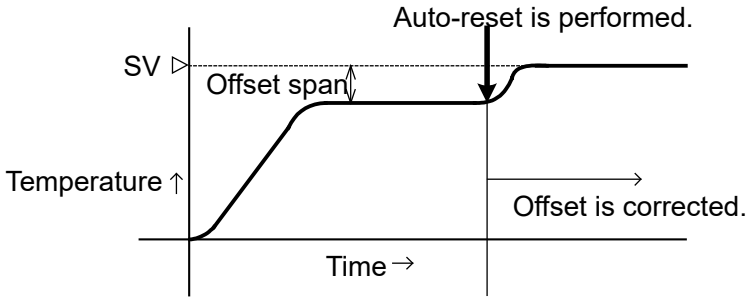

(Fig. 9-1)

10. AT

In order to set each value of P, I, D and ARW automatically, the AT process should be made to fluctuate to obtain an optimal value. One of 3 types of fluctuation below is automatically selected.
For DC voltage, current inputs, the AT process will fluctuate around the SV for conditions of [1], [2] and [3]. (p.80)

⚠ Notice

- Perform AT during the trial run.
- If PID zone function is set to “Used”, perform AT in each PID zone.
  In (Fig. 10-1), perform AT at PID zone values 1 and 2.

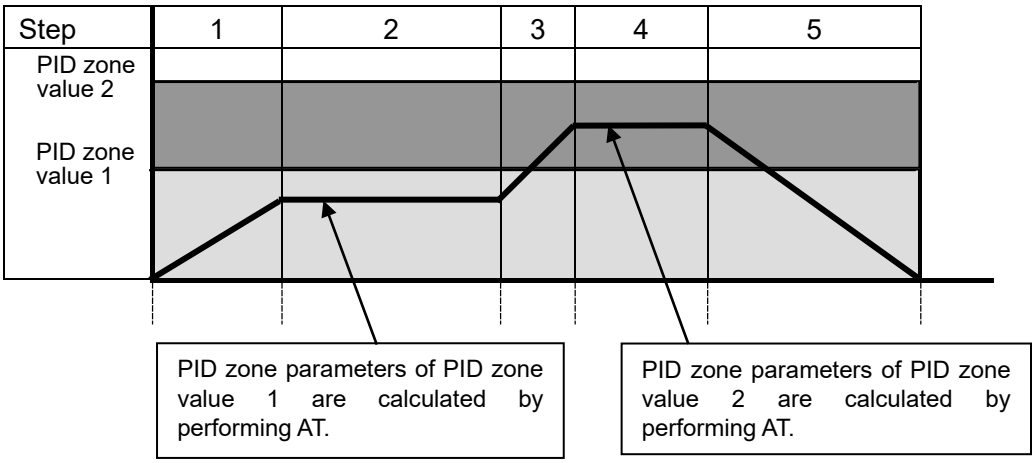

(Fig. 10-1)

- If AT is cancelled during this process, each value of P, I, D and ARW reverts to the values before the AT was performed.
- AT will be forced to stop if it has not been completed within 4 hours.
- If Direct/Reverse action is switched during AT (by selecting ‘003 Direct/Reverse action’ in [Event input allocation]), the AT stops.
- During AT, none of the setting items can be set.
- If power failure occurs during AT, the AT will stop.
- Sometimes the AT process will not fluctuate if AT is performed at or near room temperature. Therefore, AT might not finish normally.

[1] If there is a large difference between the SV and PV as the temperature is rising

When AT bias is set to 20℃, the AT process will fluctuate at the temperature 20℃ lower than the SV.

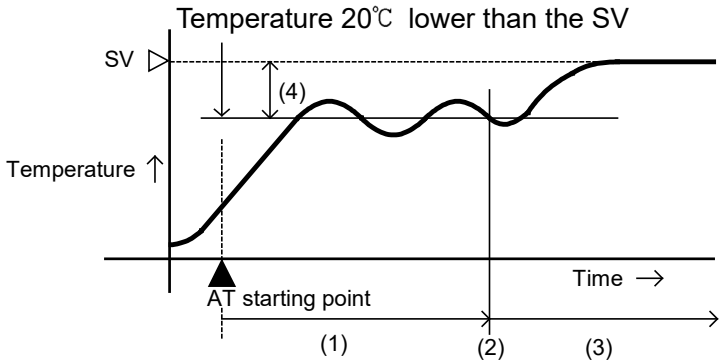

(1) Calculates PID constants.
(2) PID constants calculated
(3) Controlled by the PID constants set by AT.
(4) AT bias value

(Fig. 10-2)

[2] When the control is stable

The AT process will fluctuate around the SV.

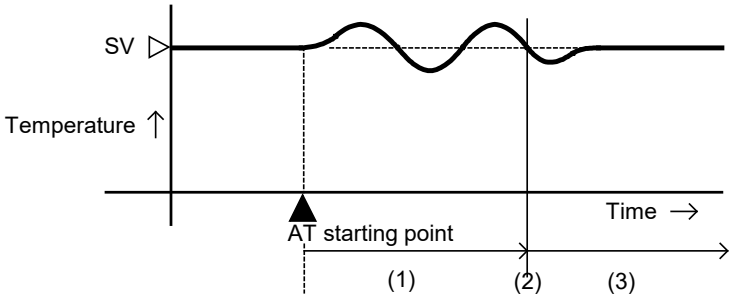

(1) Calculates PID constants.
(2) PID constants calculated
(3) Controlled by the PID constant set by AT.

(Fig. 10-3)

[3] If there is a large difference between the SV and PV as the temperature is falling

When AT bias is set to 20℃, the AT process will fluctuate at the temperature 20℃ higher than the SV.

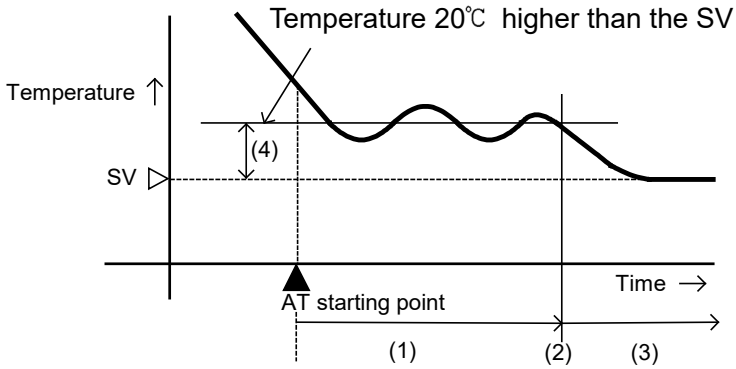

(1) Calculates PID constants.
(2) PID constants calculated
(3) Controlled by the PID constants set by AT.
(4) AT bias value

(Fig. 10-4)

11. Action Explanation

11.1 OUT1 Action

	Heating (reverse) action	Cooling (direct) action
Control action	Proportional band ON OFF SV	Proportional band ON OFF SV
R/□	H④ C⑤ L⑥ Cycle action is performed according to deviation	H④ C⑤ L⑥ Cycle action is performed according to deviation
S/□	+⑤ 12 V DC -⑥ +⑤ 12/0 V DC -⑥ +⑤ 0 V DC -⑥ Cycle action is performed according to deviation	+⑤ 0 V DC -⑥ +⑤ 0/12 V DC -⑥ +⑤ 12 V DC -⑥ Cycle action is performed according to deviation
A/□	+⑤ 20 mA DC -⑥ +⑤ 20 to 4 mA DC -⑥ +⑤ 4 mA DC -⑥ Changes continuously according to deviation	+⑤ 4 mA DC -⑥ +⑤ 4 to 20 mA DC -⑥ +⑤ 20 mA DC -⑥ Changes continuously according to deviation
Indicator (OUT1)	Lit / Unlit	Unlit / Lit

: ON (lit) or OFF (unlit)

11.2 OUT1 ON/OFF Control Action

	Heating (reverse) action			Cooling (direct) action		
Control action	Hysteresis ON OFF SV			Hysteresis ON OFF SV		
R/□	H④ C⑤ L⑥		H④ C⑤ L⑥	H④ C⑤ L⑥		H④ C⑤ L⑥
S/□	+⑤ 12 V DC -⑥		+⑤ 0 V DC -⑥	+⑤ 0 V DC -⑥		+⑤ 12 V DC -⑥
A/□	+⑤ 20 mA DC -⑥		+⑤ 4 mA DC -⑥	+⑤ 4 mA DC -⑥		+⑤ 20 mA DC -⑥
Indicator (OUT1)	Lit		Unlit	Unlit		Lit

: ON (lit) or OFF (unlit)

11.3 Alarm Action

	High limit alarm	Low limit alarm
Alarm action	EVT1 hysteresis ON OFF -EVT1 value SV +EVT1 value	EVT1 hysteresis ON OFF -EVT1 value SV +EVT1 value
Alarm output	+side - side	+side - side
	High/Low limits alarm	High/Low limits independent alarm
Alarm action	EVT1 hysteresis ON OFF EVT1 value SV EVT1 value	EVT1 hysteresis ON OFF EVT1 low limit value SV EVT1 high limit value
Alarm output		
	High/ Low limit range alarm	High/ Low limit range independent
Alarm action	EVT1 hysteresis ON OFF EVT1 value SV EVT1 value	EVT1 hysteresis ON OFF EVT1 low limit value SV EVT1 high limit value
Alarm output		
	Process high alarm	Process low alarm
Alarm action	EVT1 hysteresis ON OFF EVT1 value	EVT1 hysteresis ON OFF EVT1 value
Alarm output		

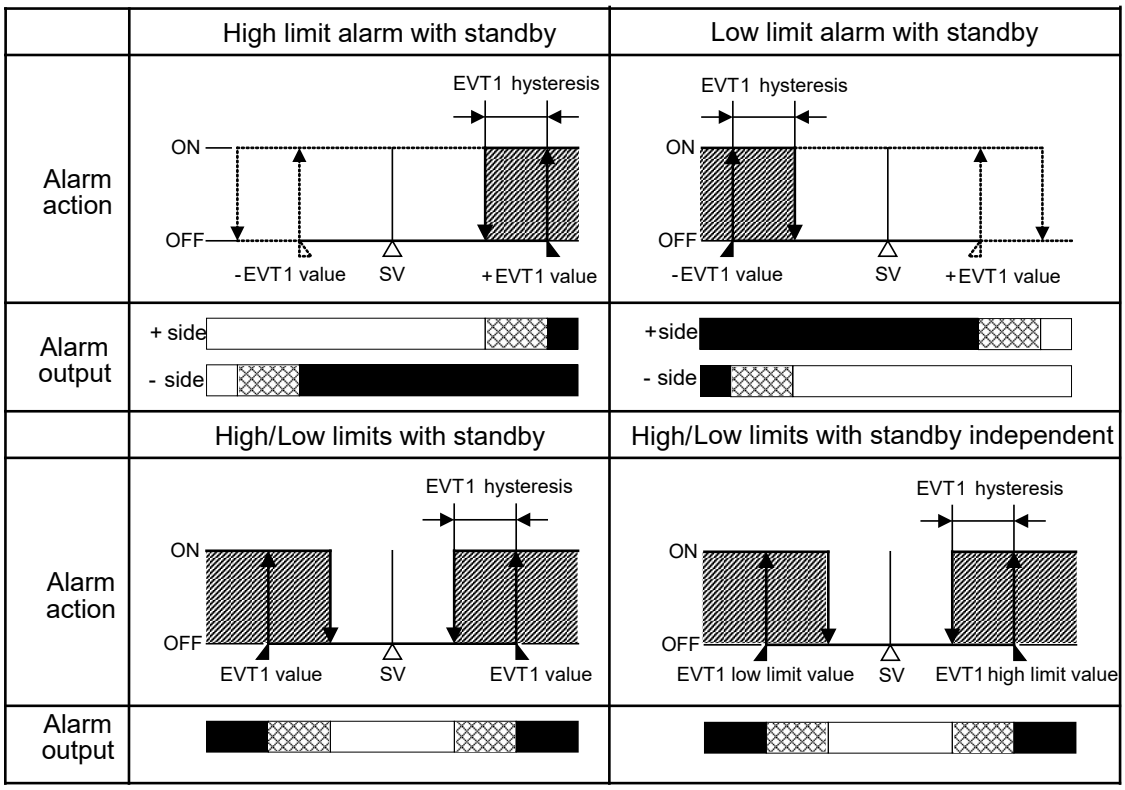

: EVT1 output terminals 9 and 10 are closed (ON).

: EVT1 output terminals 9 and 10 are closed (ON) or opened (OFF).

: EVT1 output terminals 9 and 10 are opened (OFF).

: Alarm output is in standby.

- EVT1 value represent EVT1 alarm value, and EVT1 hysteresis represent EVT1 alarm hysteresis.
- EVT1 indicator lights when their output terminals 9 and 10 are closed (ON), and turns off when their output terminals 9 and 10 are opened (OFF).
  For EVT2 to EVT5, read “EVT2 to EVT5” for “EVT1”.
  EVT2 output (terminals 7 and 8) (For A3 option, use terminals 8 and 10.)
  EVT3 output (terminals 7 and 10)
  EVT4 output (terminals 29 and 30)
  EVT5 output (terminals 28 and 30)
- For the alarm types (High limit alarm, High/Low limits alarm, High/Low limits independent, Process high alarm), the alarm is activated when the indication is overscale, and the standby function is released for the alarms with standby function.
  For the alarm types (Low limit alarm, High/Low limits alarm, High/Low limits independent, Process low alarm), the alarm is activated when the indication is underscale, and the standby function is released for the alarms with standby function.
  When Alarm action De-energized is selected, the output ON/OFF status acts conversely to the alarm action described above. (The Event indicator acts the same as the action Energized.)

	Energized	**De-energized**
Event indicator	Lights	Lights
Event output	ON	OFF

11.4 Heater Burnout Alarm Action

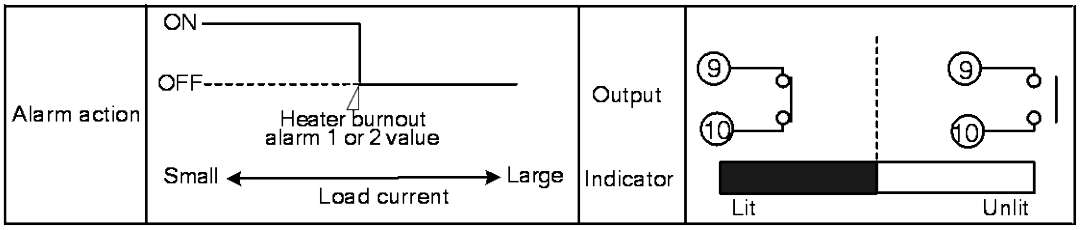

• EVT1 indicator lights when their output terminals 9 and 10 are closed (ON), and turns off when their output terminals 9 and 10 are opened (OFF).
The following shows EVT2 to EVT5 terminals.

EVT2 output (terminals 7 and 8) (For A3 option, use terminals 8 and 10.)
EVT3 output (terminals 7 and 10)
EVT4 output (terminals 29 and 30)
EVT5 output (terminals 28 and 30)

11.5 OUT2 (Heating/Cooling control) Action

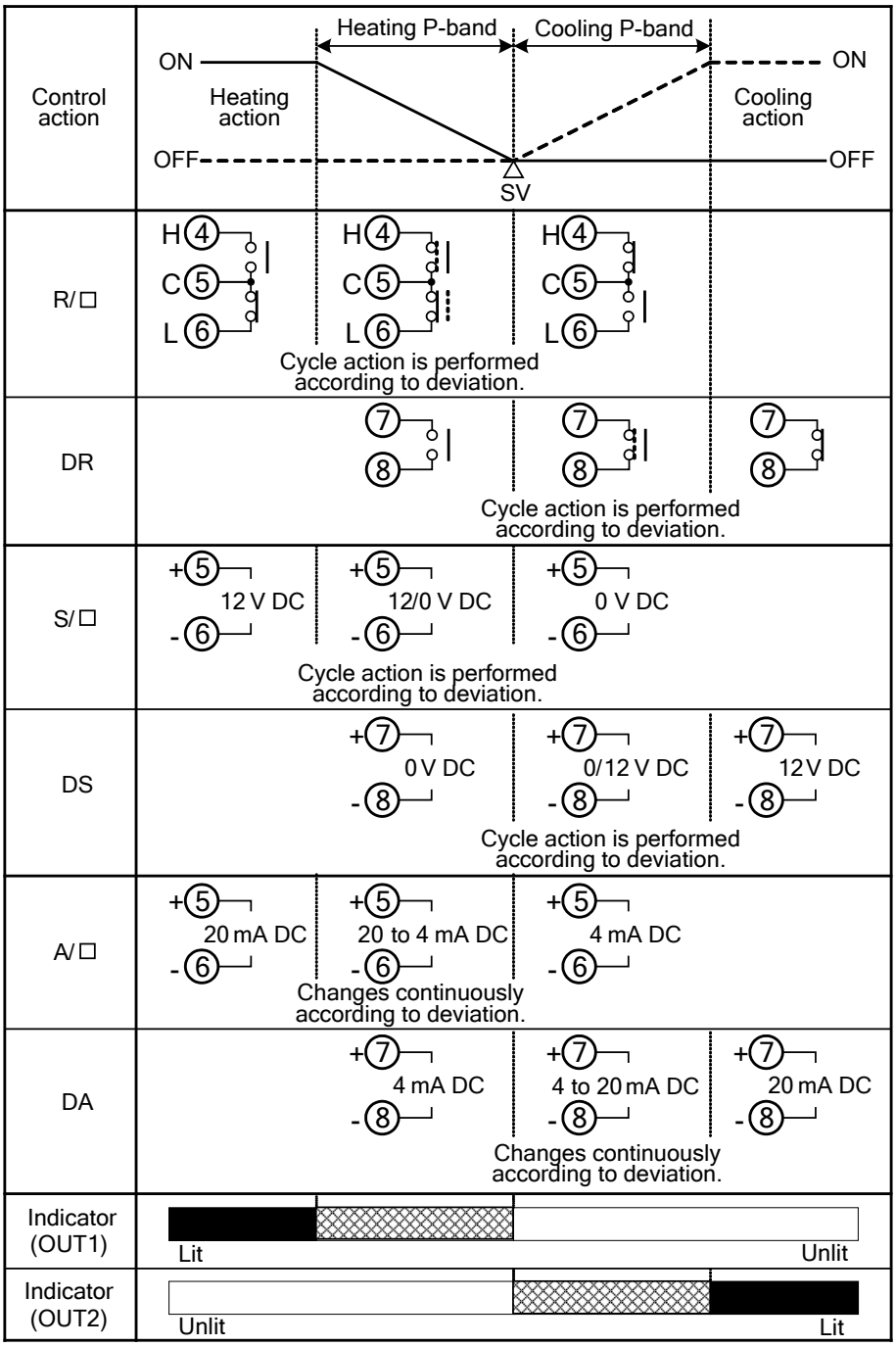

: ON (lit) or OFF (unlit)

: Represents Heating control action.

: Represents Cooling control action.

11.6 OUT2 (Heating/Cooling Control) Action (When Setting Dead Band)

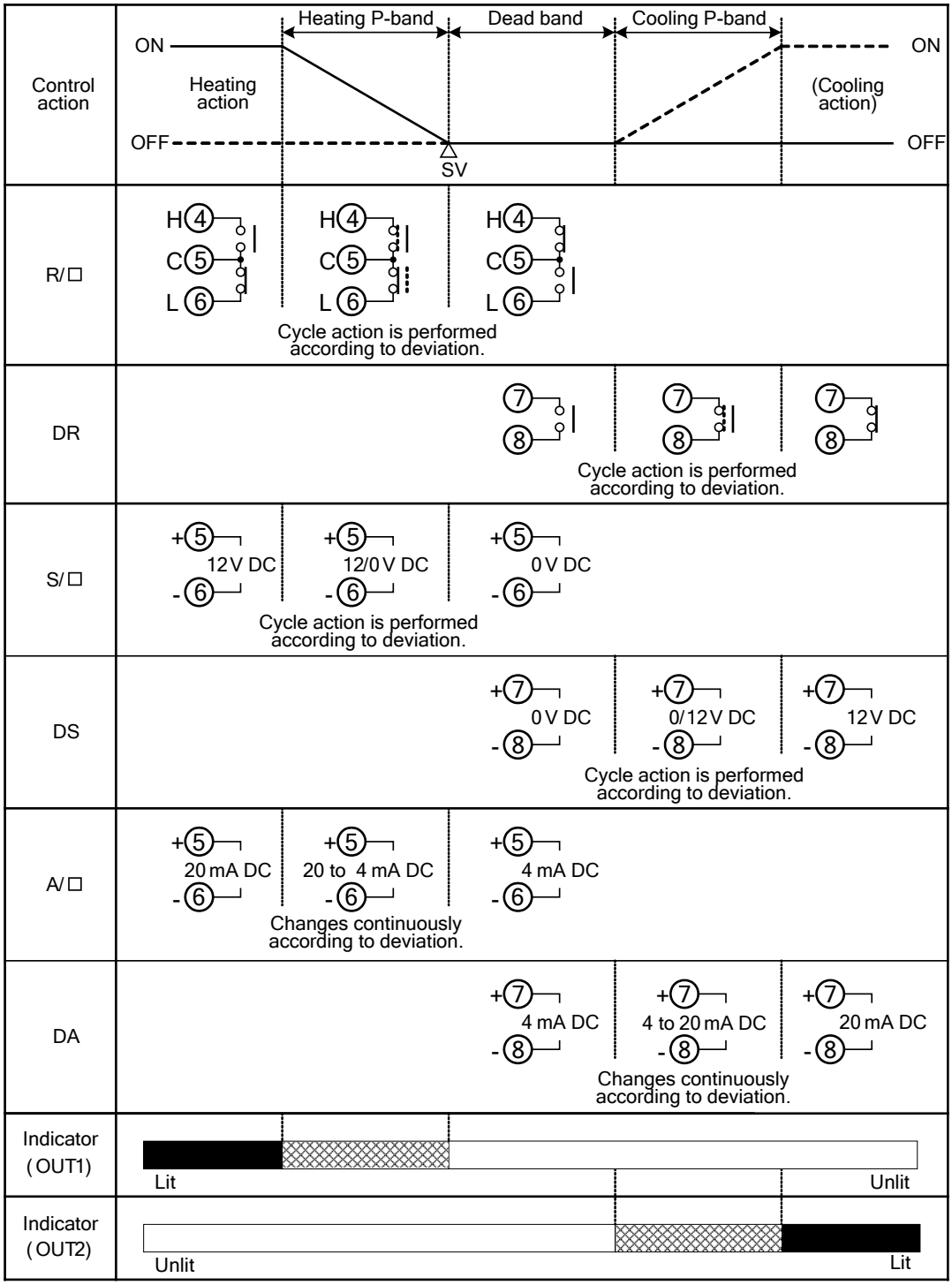

: ON (lit) or OFF (unlit)

: Represents Heating control action.

: Represents Cooling control action.

11.7 OUT2 (Heating/Cooling Control) Action (When Setting Overlap Band)

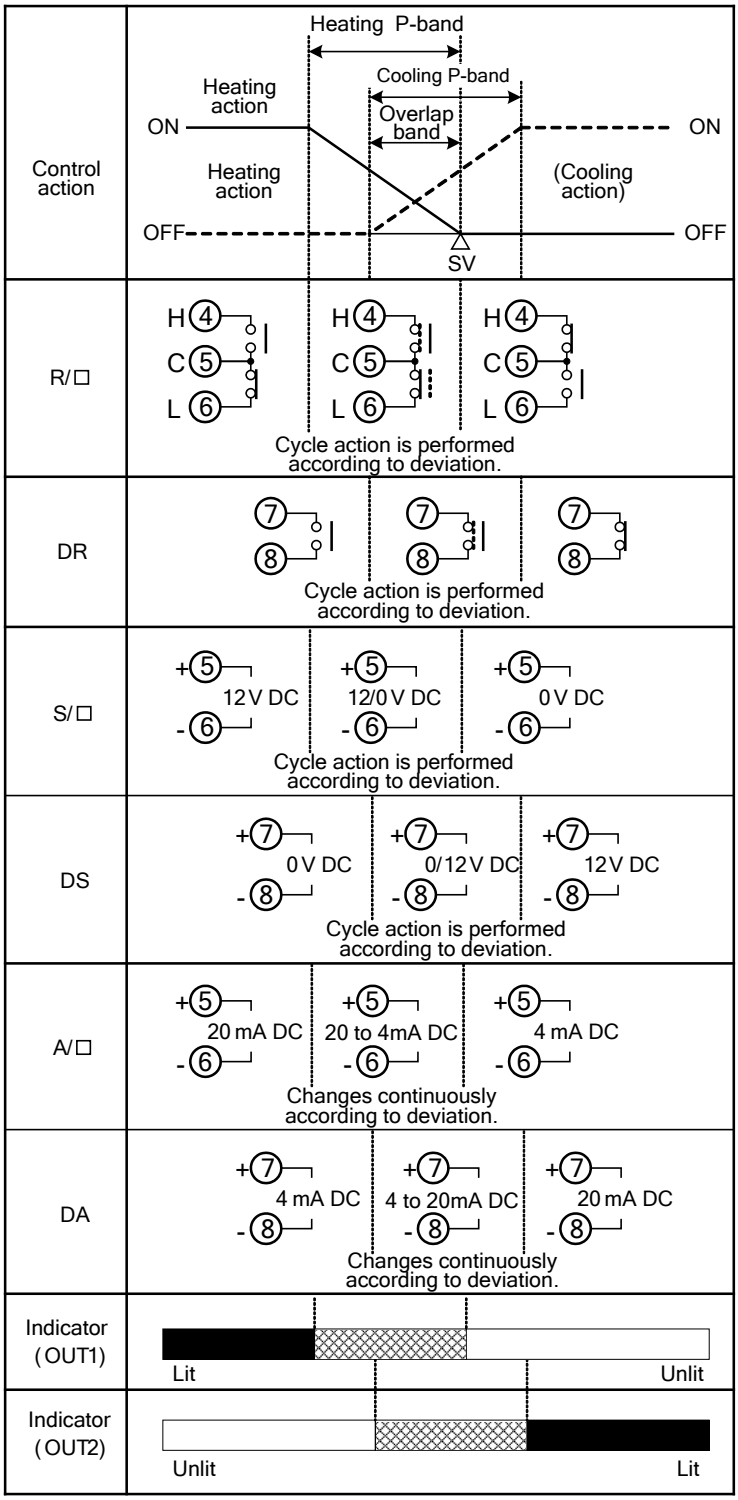

: ON (lit) or OFF (unlit)

: Represents Heating control action.

: Represents Cooling control action.

12. Specifications

12.1 Standard Specifications

Rating

Input	Thermocouple	K, J, R, S, B, E, T, N, PL-Ⅱ, C(W/Re5-26): External resistance, 100 Ω or less (However, B input: External resistance, 40 Ω max.)
	RTD	Pt100, JPt100, 3-wire type Allowable input lead wire resistance: 10 Ω max. per wire
	Direct current	0 to 20 mA DC, 4 to 20 mA DC: Input impedance: 50 Ω Allowable input current: 50 mA max.
	DC voltage	0 to10 mV DC, -10 to 10 mV DC, 0 to 50 mV DC, 0 to 100 mV DC, 0 to 1 V DC: Input impedance: 1 MΩ minimum Allowable input voltage: 5 V DC max. Allowable signal source resistance: 0 to 10 mV DC: 20 Ω max. -10 to 10 mV DC: 40 Ω max. 0 to 50 mV DC: 200 Ω max. 0 to 100 mV DC: 200 Ω max. 0 to 1 V DC: 2 kΩ max.
		0 to 5 V DC, 1 to 5 V DC, 0 to 10 V DC: Input impedance: 100 kΩ minimum Allowable input voltage: 15 V DC max. Allowable signal source resistance: 100 Ω max.
Power supply voltage	100 to 240 V AC 50/60 Hz, or 24 V AC/DC 50/60 Hz Allowable voltage fluctuation: 100 to 240 V AC: 85 to 264 V AC 24 V AC/DC: 20 to 28 V AC/DC	

General structure

External dimensions	ACD-13A: 96 x 96 x 100 mm (W x H x D) ACR-13A: 48 x 96 x 100 mm (W x H x D)	
Mounting	Flush	
Material	Case: Flame-resistant resin	
Color	Case: Black	
Drip-proof/ Dust-proof	IP66 (for front panel only)	
Display	PV Display	11-segment LCD 5-digit, Backlight Red/Green/Orange Character size: ACD-13A: 24.0 x 11.0 mm (H x W) ACR-13A: 14.0 x 5.4 mm (H x W)

	SV/MV/TIME Display: 11-segment LCD 5-digit, Backlight Green Character size: ACD-13A: 14.0 x 7.0 mm (H x W) ACR-13A: 10.0 x 4.6 mm (H x W) MV/DV bar graph: 22-segment LCD bar graph, Backlight Green MEMO/STEP Display: 11-segment LCD 2-digit, Backlight Orange Character size: ACD-13A: 10.0 x 5.0 mm (H x W) ACR-13A: 10.0 x 4.6 mm (H x W) Action indicators: Backlight Orange

Setting structure

Setting method	Digital setting using membrane sheet key

Indication performance

Base accuracy	Thermocouple: Within ±0.2% of each input span±1 digit However, R, S inputs, 0 to 200℃ (32 to 392℉): Within ±6℃ (12℉) B input, 0 to 300℃ (32 to 572℉): Accuracy is not guaranteed. K, J, E, T, N inputs, less than 0℃ (32℉): Within ±0.4% of input span±1 digit RTD: Within ±0.1% of each input span±1 digit Direct current: Within ±0.2% of each input span±1 digit DC voltage: Within ±0.2% of each input span±1 digit
External setting input accuracy	Within ±0.2% of External setting input span
Cold junction temperature compensation accuracy	Within ±1℃ at 0 to 50℃
Input sampling period	125 ms (250 ms when EA□ or EV□ option is ordered)
Time accuracy	Within ±1.0% of the setting time

Control performance

Setting accuracy	Based on the Base accuracy and Cold junction temperature compensation accuracy
Control action	PID control (with AT function) PI control: When derivative time is set to 0 PD control (with Auto/Manual reset function): When integral time is set to 0 P control (with Auto/Manual reset function): When integral and derivative time are set to 0. ON/OFF control: When proportional band is set to 0 or 0.0

Control action	

OUT1 proportional band	0 to Input span ℃ (℉) DC voltage, current inputs: 0.0 to 1000.0% (ON/OFF control when set to 0 or 0.0) (Factory default: 10℃)
Integral time	0 to 3600 seconds (OFF when set to 0) (Factory default: 200 seconds)
Derivative time	0 to 1800 seconds (OFF when set to 0) (Factory default: 50 seconds)
OUT1 proportional cycle	1 to 120 seconds (Factory default: Relay contact: 30 sec, Non-contact voltage: 3 sec, Direct current: Not available)
ARW	0 to 100% (Factory default: 50%)
OUT1 ON/OFF hysteresis	0.1 to 1000.0℃ (℉) (Factory default: 1.0℃) DC voltage, current inputs: 1 to 10000 (The placement of the decimal point follows the selection.)
OUT1 high limit	0 to 100% (Direct current: -5 to 105%) (Factory default: 100%)
OUT1 low limit	0 to 100% (Direct current: -5 to 105%) (Factory default: 0%)

Control output (OUT1)	

Relay contact	1a1b Control capacity: 3 A 250 V AC (resistive load), 1 A 250 V AC (inductive load cosϕ=0.4) Electrical life: 100,000 cycles
Non-contact voltage (SSR drive)	12 V DC±15% Maximum 40 mA (short circuit protected)
Direct current	4 to 20 mA DC (Resolution: 12000) Load resistance: Maximum 600 Ω

Standard functions

EVT1 output	The output is turned ON or OFF depending on the conditions selected in [Event output allocation]. Output: Relay contact 1a Control capacity: 3 A 250 V AC (resistive load) 1 A 250 V AC (inductive load cosϕ=0.4) Electrical life: 100,000 cycles
EVT2 output	The output is turned ON or OFF depending on the conditions selected in [Event output allocation]. If D□ or P option is ordered, EVT2 output will be disabled. Output: Relay contact 1a Control capacity: 3 A 250 V AC (resistive load) 1 A 250 V AC (inductive load cosϕ=0.4) Electrical life: 100,000 cycles

<table>
<tr><td>Alarm action</td><td>When Alarm action (Energized) is selected in [Event output allocation], the alarm action point is set by the ±deviation from the SV (except Process alarm).
When the input goes outside the range, the output turns ON or OFF (in the case of High/Low limit range alarm).
When the alarm action is set as De-energized, the output acts conversely.
Types: High limit alarm, Low limit alarm, High/Low limits alarm, High/Low limits independent, High/Low limit range, High/Low limit range independent, Process high alarm, Process low alarm, High limit with standby alarm, Low limit with standby alarm, High/Low limits with standby, High/Low limits with standby independent
Energized/De-energized action are applied to the above alarms, totaling 24 alarm types. No event can also be selected.
(Factory default: No event)
Refer to Section ‘11.3 Alarm action’ (pp. 83, 84)
<table>
<tr><td>Set value</td><td>Factory default: 0</td></tr>
<tr><td>Setting accuracy</td><td>Based on the Indication accuracy and Cold junction temperature compensation accuracy.</td></tr>
<tr><td>Action</td><td>ON/OFF action
Hysteresis:
Thermocouple, RTD inputs: 0.1 to 1000.0℃ (℉)
(Factory default: 1.0℃)
DC voltage, current inputs: 1 to 10000 (The placement of the decimal point follows the selection.)</td></tr>
<tr><td>Output</td><td>EVT output for which Alarm output is selected in [Event output allocation].</td></tr>
</table></td></tr>
<tr><td>Loop break alarm</td><td>Detects heater burnout, sensor burnout and actuator trouble.
<table>
<tr><td>Setting range</td><td>Loop break alarm time: 0 to 200 minutes
Loop break alarm band: 0 to 150℃ (℉),
0.0 to 150.0℃ (℉),
DC voltage, current inputs: 0 to 1500 (The placement of the decimal point follows the selection.)</td></tr>
<tr><td>Output</td><td>EVT output for which Loop break alarm is selected in [Event output allocation].</td></tr>
</table></td></tr>
</table>

Attached functions

Sensor correction	Corrects sensor input value.
Set value lock	Lock 1, Lock 2, Lock 3, Lock 4
Auto/Manual control switching	Auto/Manual control can be switched using the A/M B.MODE key in PV/SV Display Mode.
Program control function	Number of steps: 15 Program control starts or stops with the RUN STOP key. If Pattern end output is selected in [Event output allocation] (pp. 34-36), the Event output to which Pattern end output is allocated is turned ON when program is finished. If the △ key is pressed for 1 second while program is operational, the Advance function initiates, interrupting the performing step, and proceeds to the next step.
Power restore action	Selects program status when power failure occurs during program control RUN and is restored. Progressing time error after power is restored: 1 minute

SV ramp function	When the SV is adjusted, it approaches the new SV by the preset rate-of-change (℃/minute, ℉/minute). When the power is turned on, the control starts from the PV and approaches the SV by the rate-of-change.
Power failure countermeasure	The setting data is backed up in the non-volatile IC memory.
Self-diagnosis	The CPU is monitored by a watchdog timer, and if an abnormal status occurs, the controller is switched to warm-up status, turning all outputs OFF.
Automatic cold junction tempera-ture compensation (only thermocouple input type)	Detects the temperature at the connection terminal between the thermocouple and the instrument, and maintains it at the same status as if the reference junction location temperature were at 0℃ (32℉).
Burnout	When thermocouple or RTD input is burnt out, OUT1 and OUT2 are turned OFF (for direct current output type, OUT1 low limit value), and the PV Display flashes "‾‾‾‾‾". For the manual control, the preset MV is output. When the DC voltage or current input is disconnected, the PV Display flashes "‾‾‾‾‾" for 4 to 20 mA DC, 1 to 5 V DC inputs. For 0 to 10 mV DC, -10 to 10 mV DC, 0 to 50 mV DC, 0 to 100 mV DC and 0 to 1 V DC inputs, the PV Display flashes "‾‾‾‾‾". For 0 to 20 mA DC, 0 to 5 V DC and 0 to 10 V DC inputs, the PV display indicates the value corresponding with 0 mA or 0 V input.

Input error indication

Contents, Indication	Output status			
	OUT1		OUT2	
	Direct(Cooling)	Reverse(Heating)	Direct(Cooling)	Reverse(Heating)
Overscale Measured value has exceeded Indication range high limit value. "‾‾‾‾‾" flashes.	OFF (4 mA) or OUT1 low limit value	OFF (4 mA) or OUT1 low limit value	OFF or OUT2 low limit value	OFF or OUT2 low limit value
Underscale Measured value has dropped below Indication range low limit value. "‾‾‾‾‾" flashes.	OFF (4 mA) or OUT1 low limit value	OFF (4 mA) or OUT1 low limit value	OFF or OUT2 low limit value	OFF or OUT2 low limit value

For manual control, the preset MV is output.

Indication range, Control range

Thermocouple	[Input range low limit value - 50℃ (100℉)] to [Input range high limit value + 50℃ (100℉)]
RTD	[Input range low limit value - Input span x 1%] to [Input range high limit value + 50℃ (100℉)]
DC voltage, Direct current	[Scaling low limit value - Scaling span x 1%] to [Scaling high limit value + Scaling span x 10%]

Warm-up indication	After the power supply to the instrument is turned on, the PV Display indicates the sensor input type, and SV/MV/TIME Display indicates input range high limit value (for thermocouple, RTD inputs) or Scaling high limit value (for DC voltage, current inputs) for approximately 3 seconds.

Console communication	By connecting the USB communication cable (CMB-001) to the Console connector of the instrument, the following operations can be conducted from an external computer using the Console software SWS-AC001M. Console communication and Serial communication (C, C5 option) cannot be used together. (1) Reading and setting of SV, PID and various set values (2) Reading of PV and action status (3) Function change Communication interface: C-MOS level
PV color selection	PV Display color can be selected. (For details, see p.50.)
Timer function (Linked to the Event input)	If Timer output, which is linked to Event input, is selected in [Event output allocation], and if Timer Start/Stop is selected in [Event input allocation], this function activates. If Event input turns ON, timer counting starts, and Event output turns ON or OFF after delay time has passed. If the timer function is allocated to the Event input which is linked to control, control turns ON while Event output is ON, and turns OFF if Event output is OFF.
Bar graph	The bar graph lights depending on the selection of either MV or DV. With MV indication, if Heating/Cooling control output is ordered, bar graph indication for OUT1MV and OUT2MV differs.

Insulation, Dielectric strength

Circuit insulation configuration

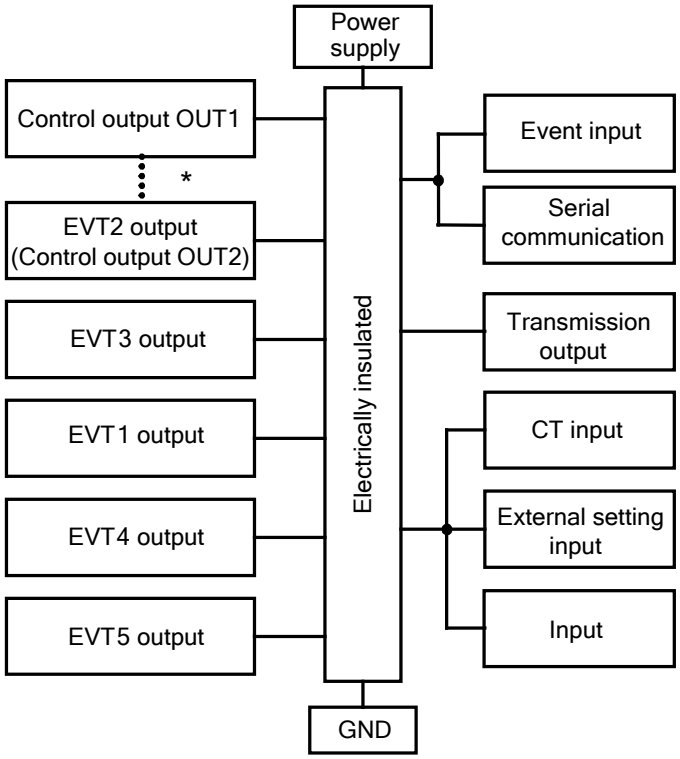

*1 When OUT1 and OUT2 are non-contact voltage or direct current output, OUT1 is not electrically insulated from OUT2.

Insulation resistance	10 MΩ minimum, at 500 V DC
Dielectric strength	Between power terminal and ground (GND): 1.5 kV AC for 1 minute Between input terminal and ground (GND): 1.5 kV AC for 1 minute Between input terminal and power terminal: 1.5 kV AC for 1 minute

Other

Power consumption	ACD-13A: Approx. 18 VA ACR-13A: Approx. 15 VA
Ambient temperature	0 to 50℃ (32 to 122℉)
Ambient humidity	35 to 85 %RH (Non-condensing)
Weight	ACD-13A: Approx. 460 g ACR-13A: Approx. 330 g
Accessories included	For the ACD-13A and ACR-13A: Mounting brackets: 1 set, Instruction manual: 1 copy Gasket (Front mounted to the unit): 1 piece For the ACR-13A only: Harness EVT5:1 piece [When Event output (A5 option) is ordered] Harness W: 1 piece [When Heater burnout alarm (W option) is ordered] Harness W: 2 pieces [When Heater burnout alarm(W3 option) is ordered] Harness E: 1 piece [When External setting input (EA□, EV□ option) is ordered] Harness VT: 1 piece [When Transmission output (TA1, TV1 option) is ordered]
Accessories sold separately	Terminal cover Heater burnout alarm 20 A: CT (CTL-6-S-H) Heater burnout alarm 100 A: CT (CTL-12-S36-10L1U) USB communication cable (CMB-001)

12.2 Optional Specifications

Event input (Option code: EI)

EVI1 to EVI4 are used as an Event input.
Any Events selected in [Event input allocation] will be performed depending on the Input ON (Closed) or OFF (Open) status. See (Fig 6.3.3-1) on p.33.
If the Set value memory number function is selected:
2^0, 2^1, 2^2 and 2^3 will be allocated to Event input EVI1 to EVI4 respectively, and the Set value memory number (SV1 to SV15) will be determined by each value of EVI1 to EVI4.
The selected Set value memory number, the added value of 2^n +1, is indicated on the MEMO/STEP Display. See Section “8.7 Set Value Memory Function” on pp.76, 77.

Circuit current when Closed	Approx. 16 mA

Event output (Option code: A3)

EVT1 to EVT3 are available using a common terminal.
The output will be turned ON or OFF depending on the conditions selected in [Event output allocation].

Output	Relay contact, 1a Control capacity: 3 A 250 V AC (Resistive load) 1 A 250 V AC (Inductive load, cosϕ=0.4) Electrical life: 100,000 cycles

Event output (Option code: A5)

EVT4 and EVT5 are available.

The output will be turned ON or OFF depending on the conditions selected in [Event output allocation].

Output	Relay contact, 1a Control capacity: 3 A 250 V AC (Resistive load) 1 A 250 V AC (Inductive load, cosϕ=0.4) Electric life: 100,000 cycles

Heater burnout alarm (including sensor burnout alarm) [Option code: W, W3]

Output will be turned ON or OFF depending on the conditions selected in [Event output allocation].

This alarm is also activated when indication is overscale and underscale.

This option cannot be applied to direct current output type.

Rated current	One type can be selected from the following. Single-phase 20 A, Single-phase 100 A 3-phase 20 A, 3-phase 100 A Single-phase: Detects burnout with CT1 input. 3-phase: Detects burnout with CT1 and CT2 input.
Setting range	0.0 to 20.0 A (for Heater rated current 20 A) (Off when set to 0.0) 0.0 to 100.0 A (for Heater rated current 100 A) (Off when set to 0.0)
Setting accuracy	Within ±5% of the rated current
Action point	Heater burnout alarm value
Action	ON/OFF action
Output	Relay contact, 1a Control capacity: 3 A 250 V AC (resistive load) 1 A 250 V AC (inductive load, cosϕ=0.4) Electric life: 100,000 cycles

Heating/Cooling control (Option code: D□)

OUT2 proportional band	0.0 to 10.0 times (Multiplied value of OUT1 proportional band) (ON/OFF control when set to 0.0)
OUT2 integral time	Same as that of OUT1.
OUT2 derivative time	Same as that of OUT1.
OUT2 proportional cycle	1 to 120 seconds [Factory default: Relay contact (DR): 30 seconds, Non-contact voltage (DS): 3 sec, Direct current (DA): Not available]
Overlap/Dead band	Thermocouple, RTD inputs: -200.0 to 200.0℃ (℉) DC voltage, current inputs: -2000 to 2000 (The placement of the decimal point follows the selection.)
OUT2 ON/OFF hysteresis	Thermocouple, RTD inputs: 0.1 to 1000.0℃ (℉) (Default: 1.0℃) DC voltage, current inputs: 1 to 10000 (The placement of the decimal point follows the selection.)
OUT2 high limit	0 to 100%, [DA (Direct current): -5 to 105%] (Factory default: 100%)
OUT2 low limit	0 to 100%, [DA (Direct current): -5 to 105%] (Factory default: 0%)

OUT2 cooling method	One cooling action can be selected from Air cooling (linear characteristics), Oil cooling (1.5th power of the linear characteristics) and Water cooling (2nd power of the linear characteristics) by keypad operation. (Factory default: Air cooling)
Cooling output (OUT2)	

DR: Relay contact, 1a	Control capacity: 3 A 250 V AC (resistive load) Electrical life: 100,000 cycles
DS: Non-contact voltage (for SSR drive)	12 V DC±15%, Max. 40 mA (short circuit protected)
DA: Direct current	4 to 20 mA DC (Resolution: 12000) Load resistance: Max. 600 Ω

Serial communication (Option code: C, C5)

This option and Console communication cannot be used together.

The following operations can be carried out from an external computer.

(1) Reading and setting of the SV, PID values and various set values

(2) Reading of the PV and action status

(3) Function change

Cable length	Max.15 m (C) Max.1.2 km (C5) Cable resistance: Within 50 Ω (Terminators are not necessary, but if used, use a terminator of 120 Ω minimum on both sides.)
Communication line	EIA RS-232C (C) EIA RS-485 (C5)
Communication method	Half-duplex communication
Synchronization method	Start-stop synchronization
Communication speed	9600 / 19200 / 38400 bps (Selectable by keypad) (Factory default: 9600 bps)
Data bit/Parity	7 bits, 8bits / Even, Odd and No parity (Selectable by keypad) (Factory default: 7 bits/Even)
Stop bit	1, 2 (Selectable by keypad) (Factory default: 1)
Communication protocol	Shinko protocol / MODBUS ASCII / MODBUS RTU (Selectable by keypad) (Factory default: Shinko protocol)
Data format	

Communication protocol	**Shinko protocol**	**MODBUS ASCII**	**MODBUS RTU**
Start bit	1	1	1
Data bit	7	7 (8) Selectable	8
Parity	Even	Even (Odd, No parity) Selectable	No parity (Even, Odd) Selectable
Stop bit	1	1 (2) Selectable	1 (2) Selectable

Number of connectable units	1 unit to 1 host computer (C) Maximum 31 units to 1 host computer (C5)
Communication error detection	Parity, checksum (Shinko protocol), LRC (MODBUS ASCII), CRC-16 (MODBUS RTU)
Digital external setting	Receives step SV from the connected Shinko programmable controllers PCA1 or PCB1 (Select 'SV digital transmission' in [Communication protocol]). SV adds SVTC bias value to the step SV received via SV digital transmission (SVTC command).

External setting input (Option code: EA□, EV□)

SV adds external analog signal to remote bias value.

Setting signal	Direct current: 4 to 20 mA DC [Option code: EA1] 0 to 20 mA DC [Option code: EA2] DC voltage: 0 to 1 V DC [Option code: EV1] 1 to 5 V DC [Option code: EV2]
Allowable input	EA□: 50 mA DC max. EV1: 5 V DC max. EV2: 10 V DC max.
Input impedance	EA□: 50 Ω EV□: 100 kΩ
Input sampling period	250 ms

Transmission output (Option code: TA1, TV1)

Converting the value (PV, SV, MV or DV transmission) to analog signal every 125 ms, outputs the value in current or voltage. (Factory default: PV transmission)

If Transmission output high limit and low limit value are the same, outputs Transmission output low limit value (4 mA DC or 0 V DC)

Resolution	12000
Output	4 to 20 mA DC (load resistance, maximum 500 Ω) 0 to 1 V DC (load resistance, minimum 100 kΩ)
Output accuracy	Within ±0.3% of Transmission output span

Insulated power output (Option code: P)

Output voltage	24±3 V DC (when load current is 30 mA DC)
Ripple voltage	Within 200 mV DC (when load current is 30 mA DC)
Max. load current	30 mA DC

13. Troubleshooting

If any malfunctions occur, refer to the following items after checking that power is being supplied to the controller.

13.1 Indication

Problem	Possible Cause and Solution
[oFF], nothing or PV is indicated on the PV Display.	• Control output OFF function is working. Press the RUN/STOP key for approx. 1 second to release the function.
[- - - - -] is flashing on the PV Display.	• Burnout of thermocouple, RTD or disconnection of DC voltage (0 to 10 mV DC, -10 to 10 mV DC, 0 to 50 mV DC, 0 to 100 mV DC, 0 to 1 V DC) Change each sensor. **How to check whether the sensor is burnt out** [Thermocouple] If the input terminals of the instrument are shorted, and if a value around room temperature is indicated, the instrument is likely to be operating normally, however, the sensor may be burnt out. [RTD] If approx. 100 Ω of resistance is connected to the input terminals between A-B of the instrument and between B-B is shorted, and if a value around 0℃ (32℉) is indicated, the instrument is likely to be operating normally, however, the sensor may be burnt out. [DC voltage (0 to 10 mV DC, -10 to 10 mV DC, 0 to 50 mV DC, 0 to 100 mV DC, 0 to 1 V DC)] If the input terminals of the instrument are shorted, and if a scaling low limit value is indicated, the instrument is likely to be operating normally, however, the signal wire may be disconnected. • Check whether the input terminals of thermocouple, RTD or DC voltage (0 to 10 mV DC, -10 to 10 mV DC, 0 to 50 mV DC, 0 to 100 mV DC, 0 to 1 V DC) are securely mounted to the instrument input terminal. Connect the sensor terminals to the instrument input terminals securely.
[- - - - -] is flashing on the PV Display.	• Check whether input signal wire for DC voltage (1 to 5 V DC) or direct current (4 to 20 mA DC) is disconnected. **How to check whether the input signal wire is disconnected** [DC voltage (1 to 5 V DC)] If the input to the input terminals of the instrument is 1 V DC and if a scaling low limit value is indicated, the instrument is likely to be operating normally, however, the signal wire may be disconnected. [Direct current (4 to 20 mA DC)] If the input to the input terminals of the instrument is 4 mA DC and if a scaling low limit value is indicated, the instrument is likely to be operating normally, however, the signal wire may be disconnected. • Check whether input signal wire for DC voltage (1 to 5 V DC) or direct current (4 to 20 mA DC) is securely connected to the instrument input terminals.

Problem	Possible Cause and Solution
[- - - - -] is flashing on the PV Display.	• Check if polarity of thermocouple or compensating lead wire is correct. • Check whether codes (A, B, B) of RTD match the instrument terminals.
The PV Display keeps indicating the value which was set in [Scaling low limit].	• Check whether the input signal wire for DC voltage (0 to 5 V DC, 0 to 10 V DC) and current (0 to 20 mA DC) is disconnected. **How to check whether the input signal wire is disconnected** [Voltage (0 to 5 V DC, 0 to 10 V DC)] If the input to the input terminals of the instrument is 1 V DC and if a value (converted value from Scaling high, low limit setting) corresponding to 1 V DC is indicated, the instrument is likely to be operating normally, however, the signal wire may be disconnected. [Direct current (0 to 20 mA DC)] If the input to the input terminals of the instrument is 4 mA DC and if a value (converted value from Scaling high, low limit setting) corresponding to 4 mA DC is indicated, the instrument is likely to be operating normally, however, the signal wire may be disconnected. • Check whether the input lead wire terminals for DC voltage (0 to 5 V DC, 0 to 10 V DC) or direct current (0 to 20 mA DC) are securely mounted to the instrument input terminals.
The indication of PV display is irregular or unstable.	• Check whether sensor input or temperature unit (℃, ℉) is correct. Select the sensor input and temperature unit (℃, ℉) properly. • Sensor correcting value is unsuitable. Set it to a suitable value. • Check whether the specification of the sensor is correct. • AC leaks into the sensor circuit. Use an ungrounded type sensor. • There may be equipment that interferes with or makes noise near the controller. Keep ACD-13A or ACR-13A clear of any potentially disruptive equipment.
[ERR 1□] is indicated on the PV Display.	• Internal memory is defective. Contact our agency or us.

13.2 Key Operation

Problem	Possible Cause and Solution
• Unable to set the SV, P, I, D, Event alarm value, etc. • The values do not change by the △, ▽ keys.	• Set value lock (Lock 1 to Lock 4) is selected. Release the lock in [Set value lock]. • AT (Auto-tuning) or auto-reset is performing. In the case of AT, cancel AT. It takes approximately 4 minutes until auto-reset is finished.
Setting items of each Event output are not indicated.	Check if the desired action has been selected in [Event output allocation].

13.3 Control

Problem	Possible Cause and Solution
Temperature does not rise.	• Sensor is out of order. Replace the sensor. • Check whether the Sensor or control output terminals are securely mounted to the instrument input terminals. Ensure that the sensor or control output terminals are mounted to the instrument input terminals securely. • Check whether the wiring of sensor or control output terminals is correct.
The control output remains in an ON status.	• OUT1 or OUT2 low limit value is set to 100% or higher. Set it to a suitable value.
The control output remains in an OFF status.	• OUT1 or OUT2 high limit value is set to 0% or less. Set it to a suitable value.

For all other malfunctions, please contact our main office or dealers.

14. Character Tables

The PV Display indicates setting characters, and the SV/MV/TIME Display indicates factory default.

[Simplified Setting]

SV setting mode

Character	Setting Item, Setting Range	Data
S 0	**SV** Setting range: Scaling low limit to Scaling high limit	

Event setting mode

Character	Setting Item, Setting Range	Data
A1 0	**EVT1 alarm value** Setting range: Refer to (Table 14-1) on p.103.	
A1H 0	**EVT1 high limit alarm value** Setting range: Refer to (Table 14-1) on p.103.	
A2 0	**EVT2 alarm value** Setting range: Refer to (Table 14-1) on p.103.	
A2H 0	**EVT2 high limit alarm value** Setting range: Refer to (Table 14-1) on p.103.	
A3 0	**EVT3 alarm value** Setting range: Refer to (Table 14-1) on p.103.	
A3H 0	**EVT3 high limit alarm value** Setting range: Refer to (Table 14-1) on p.103.	
A4 0	**EVT4 alarm value** Setting range: Refer to (Table 14-1) on p.103.	
A4H 0	**EVT4 high limit alarm value** Setting range: Refer to (Table 14-1) on p.103.	
A5 0	**EVT5 alarm value** Setting range: Refer to (Table 14-1) on p.103.	
A5H 0	**EVT5 high limit alarm value** Setting range: Refer to (Table 14-1) on p.103.	

(Table 14-1)

Alarm Type	Setting Range
High limit alarm (Deviation setting)	-(Input span) to Input span ℃ (℉) *1
Low limit alarm (Deviation setting)	-(Input span) to Input span ℃ (℉) *1
High/Low limits alarm (Deviation setting)	0 to Input span ℃ (℉) *1
High/Low limits independent (Deviation setting)	0 to Input span ℃ (℉) *1
High/Low limit range alarm (Deviation setting)	0 to Input span ℃ (℉) *1
High/Low limit range independent (Deviation setting)	0 to Input span ℃ (℉) *1
Process high alarm	Input range low limit to Input range high limit*2
Process low alarm	Input range low limit to Input range high limit*2
High limit with standby alarm (Deviation setting)	-(Input span) to Input span ℃ (℉) *1
Low limit with standby alarm (Deviation setting)	-(Input span) to Input span ℃ (℉) *1
High/Low limits with standby (Deviation setting)	0 to Input span ℃ (℉) *1
High/Low limits with standby independent (Deviation setting)	0 to Input span ℃ (℉) *1

*1: For DC voltage, current inputs, the input span is the same as the scaling span.
*2: For DC voltage, current inputs, input range low (or high) limit value is the same as scaling low (or high) limit value.

PID setting mode

Character	Setting Item, Setting Range	Data
P 10	**OUT1 proportional band** Setting range: 0 to Input span ℃ (℉) DC voltage, current inputs: 0.0 to 1000.0%	
P_b 1.0	**OUT2 proportional band** Setting range: 0.0 to 10.0 times (Multiplied value of OUT1 proportional band)	
I 200	**Integral time** Setting range: 0 to 3600 seconds	
d 50	**Derivative time** Setting range: 0 to 1800 seconds	
ARW 50	**ARW** Setting range: 0 to 100%	
RSET 0.0	**Manual reset** Setting range: ±1000.0 DC voltage, current inputs: The placement of the decimal point follows the selection.	
oRAT 0	**OUT1 rate-of-change** Setting range: 0 to 100 %/sec	

[Group Selection]

SV, Event group (for Fixed value control)

Character	Setting Item, Setting Range	Data
G_4	**SV, Event group**	
4 0	**SV1** Setting range: Scaling low limit to Scaling high limit	
A1 0	**EVT1 alarm value** Setting range: Refer to (Table 14-1) on p.103.	
A1H 0	**EVT1 high limit alarm value** Setting range: Refer to (Table 14-1) on p.103.	
A2 0	**EVT2 alarm value** Setting range: Refer to (Table 14-1) on p.103.	
A2H 0	**EVT2 high limit alarm value** Setting range: Refer to (Table 14-1) on p.103.	
A3 0	**EVT3 alarm value** Setting range: Refer to (Table 14-1) on p.103.	
A3H 0	**EVT3 high limit alarm value** Setting range: Refer to (Table 14-1) on p.103.	
A4 0	**EVT4 alarm value** Setting range: Refer to (Table 14-1) on p.103.	
A4H 0	**EVT4 high limit alarm value** Setting range: Refer to (Table 14-1) on p.103.	
A5 0	**EVT5 alarm value** Setting range: Refer to (Table 14-1) on p.103.	
A5H 0	**EVT5 high limit alarm value** Setting range: Refer to (Table 14-1) on p.103.	

Program pattern group (for Program control)

Character	Setting Item, Setting Range	Data
G_4	**Program pattern group**	
4 0 STEP 1	**Step 1 SV** Setting range: Scaling low limit to Scaling high limit	
TIME 00.00 STEP 1	**Step 1 time** Setting range: 00:00 to 99:59	
WAIT 0 STEP 1	**Step 1 Wait value** Setting range: 0 to Converted value of 20% of input span	
A1 0 STEP 1	**Step 1 EVT1 alarm value** Setting range: Refer to (Table 14-1) on p.103.	
A1H 0 STEP 1	**Step 1 EVT1 high limit alarm value** Setting range: Refer to (Table 14-1) on p.103.	
A2 0 STEP 1	**Step 1 EVT2 alarm value** Setting range: Refer to (Table 14-1) on p.103.	
A2H 0 STEP 1	**Step 1 EVT2 high limit alarm value** Setting range: Refer to (Table 14-1) on p.103.	
A3 0 STEP 1	**Step 1 EVT3 alarm value** Setting range: Refer to (Table 14-1) on p.103.	
A3H 0 STEP 1	**Step 1 EVT3 high limit alarm value** Setting range: Refer to (Table 14-1) on p.103.	
A4 0 STEP 1	**Step 1 EVT4 alarm value** Setting range: Refer to (Table 14-1) on p.103.	
A4H 0 STEP 1	**Step 1 EVT4 high limit alarm value** Setting range: Refer to (Table 14-1) on p.103.	
A5 0 STEP 1	**Step 1 EVT5 alarm value** Setting range: Refer to (Table 14-1) on p.103.	

Character	Setting Item, Setting Range	Data
ASH 0 STEP 1	**Step 1 EVT5 high limit alarm value** Setting range: Refer to (Table 14-1) on p.103.	
	Step 2 SV	
	Step 2 time	
	Step 2 Wait value	
	Step 2 EVT1 alarm value	
	Step 2 EVT1 high limit alarm value	
	Step 2 EVT2 alarm value	
	Step 2 EVT2 high limit alarm value	
	Step 2 EVT3 alarm value	
	Step 2 EVT3 high limit alarm value	
	Step 2 EVT4 alarm value	
	Step 2 EVT4 high limit alarm value	
	Step 2 EVT5 alarm value	
	Step 2 EVT5 high limit alarm value	
	Step 3 SV	
	Step 3 time	
	Step 3 Wait value	
	Step 3 EVT1 alarm value	
	Step 3 EVT1 high limit alarm value	
	Step 3 EVT2 alarm value	
	Step 3 EVT2 high limit alarm value	
	Step 3 EVT3 alarm value	
	Step 3 EVT3 high limit alarm value	
	Step 3 EVT4 alarm value	
	Step 3 EVT4 high limit alarm value	
	Step 3 EVT5 alarm value	
	Step 3 EVT5 high limit alarm value	
	Step 4 SV	
	Step 4 time	
	Step 4 Wait value	
	Step 4 EVT1 alarm value	
	Step 4 EVT1 high limit alarm value	
	Step 4 EVT2 alarm value	
	Step 4 EVT2 high limit alarm value	
	Step 4 EVT3 alarm value	
	Step 4 EVT3 high limit alarm value	
	Step 4 EVT4 alarm value	
	Step 4 EVT4 high limit alarm value	
	Step 4 EVT5 alarm value	

Character	Setting Item, Setting Range	Data
	Step 4 EVT5 high limit alarm value	
	Step 5 SV	
	Step 5 time	
	Step 5 Wait value	
	Step 5 EVT1 alarm value	
	Step 5 EVT1 high limit alarm value	
	Step 5 EVT2 alarm value	
	Step 5 EVT2 high limit alarm value	
	Step 5 EVT3 alarm value	
	Step 5 EVT3 high limit alarm value	
	Step 5 EVT4 alarm value	
	Step 5 EVT4 high limit alarm value	
	Step 5 EVT5 alarm value	
	Step 5 EVT5 high limit alarm value	
	Step 6 SV	
	Step 6 time	
	Step 6 Wait value	
	Step 6 EVT1 alarm value	
	Step 6 EVT1 high limit alarm value	
	Step 6 EVT2 alarm value	
	Step 6 EVT2 high limit alarm value	
	Step 6 EVT3 alarm value	
	Step 6 EVT3 high limit alarm value	
	Step 6 EVT4 alarm value	
	Step 6 EVT4 high limit alarm value	
	Step 6 EVT5 alarm value	
	Step 6 EVT5 high limit alarm value	
	Step 7 SV	
	Step 7 time	
	Step 7 Wait value	
	Step 7 EVT1 alarm value	
	Step 7 EVT1 high limit alarm value	
	Step 7 EVT2 alarm value	
	Step 7 EVT2 high limit alarm value	
	Step 7 EVT3 alarm value	
	Step 7 EVT3 high limit alarm value	
	Step 7 EVT4 alarm value	
	Step 7 EVT4 high limit alarm value	
	Step 7 EVT5 alarm value	
	Step 7 EVT5 high limit alarm value	
	Step 8 SV	

Character	Setting Item, Setting Range	Data
	Step 8 time	
	Step 8 Wait value	
	Step 8 EVT1 alarm value	
	Step 8 EVT1 high limit alarm value	
	Step 8 EVT2 alarm value	
	Step 8 EVT2 high limit alarm value	
	Step 8 EVT3 alarm value	
	Step 8 EVT3 high limit alarm value	
	Step 8 EVT4 alarm value	
	Step 8 EVT4 high limit alarm value	
	Step 8 EVT5 alarm value	
	Step 8 EVT5 high limit alarm value	
	Step 9 SV	
	Step 9 time	
	Step 9 Wait value	
	Step 9 EVT1 alarm value	
	Step 9 EVT1 high limit alarm value	
	Step 9 EVT2 alarm value	
	Step 9 EVT2 high limit alarm value	
	Step 9 EVT3 alarm value	
	Step 9 EVT3 high limit alarm value	
	Step 9 EVT4 alarm value	
	Step 9 EVT4 high limit alarm value	
	Step 9 EVT5 alarm value	
	Step 9 EVT5 high limit alarm value	
	Step 10 SV	
	Step 10 time	
	Step 10 Wait value	
	Step 10 EVT1 alarm value	
	Step 10 EVT1 high limit alarm value	
	Step 10 EVT2 alarm value	
	Step 10 EVT2 high limit alarm value	
	Step 10 EVT3 alarm value	
	Step 10 EVT3 high limit alarm value	
	Step 10 EVT4 alarm value	
	Step 10 EVT4 high limit alarm value	
	Step 10 EVT5 alarm value	
	Step 10 EVT5 high limit alarm value	
	Step 11 SV	
	Step 11 time	
	Step 11 Wait value	

Character	Setting Item, Setting Range	Data
	Step 11 EVT1 alarm value	
	Step 11 EVT1 high limit alarm value	
	Step 11 EVT2 alarm value	
	Step 11 EVT2 high limit alarm value	
	Step 11 EVT3 alarm value	
	Step 11 EVT3 high limit alarm value	
	Step 11 EVT4 alarm value	
	Step 11 EVT4 high limit alarm value	
	Step 11 EVT5 alarm value	
	Step 11 EVT5 high limit alarm value	
	Step 12 SV	
	Step 12 time	
	Step 12 Wait value	
	Step 12 EVT1 alarm value	
	Step 12 EVT1 high limit alarm value	
	Step 12 EVT2 alarm value	
	Step 12 EVT2 high limit value	
	Step 12 EVT3 alarm value	
	Step 12 EVT3 high limit alarm value	
	Step 12 EVT4 alarm value	
	Step 12 EVT4 high limit alarm value	
	Step 12 EVT5 alarm value	
	Step 12 EVT5 high limit alarm value	
	Step 13 SV	
	Step 13 time	
	Step 13 Wait value	
	Step 13 EVT1 alarm value	
	Step 13 EVT1 high limit alarm value	
	Step 13 EVT2 alarm value	
	Step 13 EVT2 high limit alarm value	
	Step 13 EVT3 alarm value	
	Step 13 EVT3 high limit alarm value	
	Step 13 EVT4 alarm value	
	Step 13 EVT4 high limit alarm value	
	Step 13 EVT5 alarm value	
	Step 13 EVT5 high limit alarm value	
	Step 14 SV	
	Step 14 time	
	Step 14 Wait value	
	Step 14 EVT1 alarm value	
	Step 14 EVT1 high limit alarm value	

Character	Setting Item, Setting Range	Data
	Step 14 EVT2 alarm value	
	Step 14 EVT2 high limit alarm value	
	Step 14 EVT3 alarm value	
	Step 14 EVT3 high limit alarm value	
	Step 14 EVT4 alarm value	
	Step 14 EVT4 high limit alarm value	
	Step 14 EVT5 alarm value	
	Step 14 EVT5 high limit alarm value	
	Step 15 SV	
	Step 15 time	
	Step 15 Wait value	
	Step 15 EVT1 alarm value	
	Step 15 EVT1 high limit alarm value	
	Step 15 EVT2 alarm value	
	Step 15 EVT2 high limit alarm value	
	Step 15 EVT3 alarm value	
	Step 15 EVT3 high limit alarm value	
	Step 15 EVT4 alarm value	
	Step 15 EVT4 high limit alarm value	
	Step 15 EVT5 alarm value	
	Step 15 EVT5 high limit alarm value	

PID group

Character	Setting Item, Setting Range	Data
G_PId	**PID group**	
ZV 0	**PID zone value 1** Setting range: Scaling low limit to Scaling high limit	
P 10	**OUT1 proportional band 1** Setting range: 0 to Input span ℃ (℉) DC voltage, current inputs: 0.0 to 1000.0%	
P_b 1.0	**OUT2 proportional band 1** Setting range: 0.0 to 10.0 times (Multiplied value of OUT1 proportional band)	
I 200	**Integral time 1** Setting range: 0 to 3600 seconds	
d 50	**Derivative time 1** Setting range: 0 to 1800 seconds	
ARW 50	**ARW 1** Setting range: 0 to 100%	
RSET 0.0	**Manual reset 1** Setting range: ±1000.0 DC voltage, current inputs: The placement of the decimal point follows the selection.	
oRAT 0	**OUT1 rate-of-change 1** Setting range: 0 to 100 %/sec	
	PID zone value 2	
	OUT1 proportional band 2	
	OUT2 proportional band 2	
	Integral time 2	
	Derivative time 2	
	ARW 2	
	Manual reset 2	
	OUT1 rate-of-change 2	
	PID zone value 3	
	OUT1 proportional band 3	
	OUT2 proportional band 3	

	Integral time 3	
	Derivative time 3	
	ARW 3	
	Manual reset 3	
	OUT1 rate-of-change 3	
	PID zone value 4	
	OUT1 proportional band 4	
	OUT2 proportional band 4	
	Integral time 4	
	Derivative time 4	
	ARW 4	
	Manual reset 4	
	OUT1 rate-of-change 4	
	PID zone value 5	
	OUT1 proportional band 5	
	OUT2 proportional band 5	
	Integral time 5	
	Derivative time 5	
	ARW 5	
	Manual reset 5	
	OUT1 rate-of-change 5	

AT group

Character	Setting Item, Setting Range	Data
G_AT	**AT group**	
AT -----	**AT/Auto-reset** -----: AT/ Auto-reset Cancel AT□□□ / RYET□: AT/ Auto-reset Perform	
AT_b 20	**AT bias** Setting range: 0 to 50℃ (0 to 100℉) With a decimal point: 0.0 to 50.0℃ (0.0 to 100.0℉)	

Engineering group

Character	Setting Item, Setting Range	Data
G_ENG	**Engineering group**	

Input group

Character	Setting Item, Setting Range	Data
E_INP	**Input group**	
SENS K C	**Input type**	

K□□□C	K	-200	to	1370	℃
K□□ .C	K	-200.0	to	400.0	℃
J□□□C	J	-200	to	1000	℃
R□□□C	R	0	to	1760	℃
S□□□C	S	0	to	1760	℃
b□□□C	B	0	to	1820	℃
E□□□C	E	-200	to	800	℃
T□□ .C	T	-200.0	to	400.0	℃
N□□□C	N	-200	to	1300	℃
PL2□C	PL-Ⅱ	0	to	1390	℃
C□□□C	C(W/Re5-26)	0	to	2315	℃
PT□ .C	Pt100	-200.0	to	850.0	℃
JPT .C	JPt100	-200.0	to	500.0	℃
PT□□C	Pt100	-200	to	850	℃
JPT□C	JPt100	-200	to	500	℃
PT 1 .C	Pt100	-100.0	to	100.0	℃
PT5 .C	Pt100	-100.0	to	500.0	℃
K□□□F	K	-328	to	2498	℉
K□□ .F	K	-328.0	to	752.0	℉
J□□□F	J	-328	to	1832	℉
R□□□F	R	32	to	3200	℉
S□□□F	S	32	to	3200	℉
b□□□F	B	32	to	3308	℉
E□□□F	E	-328	to	1472	℉
T□□ .F	T	-328.0	to	752.0	℉
N□□□F	N	-328	to	2372	℉
PL2□F	PL-Ⅱ	32	to	2534	℉

c□□□F	C(W/Re5-26)	32	to	4199	℉
Pr□ .F	Pt100	-328.0	to	1562.0	℉
JPr .F	JPt100	-328.0	to	932.0	℉
Pr□□F	Pt100	-328	to	1562	℉
JPr□F	JPt100	-328	to	932	℉
Pr2 .F	Pt100	-148.0	to	212.0	℉
Pr9 .F	Pt100	-148.0	to	932.0	℉
020mA	0 to 20 mA DC	-2000	to	10000	
□ 10mV	0 to 10 mV DC	-2000	to	10000	
- 10mV	-10 to 10 mV DC	-2000	to	10000	
□50mV	0 to 50 mV DC	-2000	to	10000	
100mV	0 to 100 mV DC	-2000	to	10000	
0□ 1□V	0 to 1 V DC	-2000	to	10000	
0□5□V	0 to 5 V DC	-2000	to	10000	
1□5□V	1 to 5 V DC	-2000	to	10000	
0 10□V	0 to 10 V DC	-2000	to	10000	

SrLH 1370	**Scaling high limit** Setting range: Scaling low limit to Input range high limit DC voltage, current inputs: -2000 to 10000 (The placement of the decimal point follows the selection.)	
SrLL -200	**Scaling low limit** Setting range: Input range low limit to Scaling high limit DC voltage, current inputs: -2000 to 10000 (The placement of the decimal point follows the selection.)	
dP 0	**Decimal point place** □□□□0 : No decimal point □□□0.0 : 1 digit after decimal point □□0.00 : 2 digits after decimal point □0.000 : 3 digits after decimal point 0.0000 : 4 digits after decimal point	
FILr 0.0	**PV filter time constant** Setting range: 0.0 to 100.0 seconds	
So 0.0	**Sensor correction** Setting range: -200.0 to 200.0℃ (℉) DC voltage, current inputs: -2000 to 2000 (The placement of the decimal point follows the selection.)	

Output group

Character	Setting Item, Setting Range	Data
E_oUt	**Output group**	
c 30	**OUT1 proportional cycle** Setting range: 1 to 120 seconds	
c_b 30	**OUT2 proportional cycle** Setting range: 1 to 120 seconds	
oLH 100	**OUT1 high limit** Setting range: OUT1 low limit to 100% (Direct current output: OUT1 low limit to 105%)	
oLL 0	**OUT1 low limit** Setting range: 0% to OUT1 high limit (Direct current output: -5% to OUT1 high limit)	
HYS 1.0	**OUT1 ON/OFF hysteresis** Setting range: 0.1 to 1000.0℃ (℉) DC voltage, current inputs: 1 to 10000 (The placement of the decimal point follows the selection.)	
cAcT AIR	**OUT2 cooling method** AIR: Air cooling (linear characteristics) oIL: Oil cooling (1.5th power of the linear characteristics) WAT: Water cooling (2nd power of the linear characteristics)	
oLHb 100	**OUT2 high limit** Setting range: OUT2 low limit to 100% (Direct current output: OUT2 low limit to 105%)	
oLLb 0	**OUT2 low limit** Setting range: 0% to OUT2 high limit (Direct current output: -5% to OUT2 high limit)	
db 0.0	**Overlap/Dead band** Setting range: -200.0 to 200.0℃ (℉) DC voltage, current inputs: -2000 to 2000 (The placement of the decimal point follows the selection.)	
HYSb 1.0	**OUT2 ON/OFF hysteresis** Setting range: 0.1 to 1000.0℃ (℉) DC voltage, current inputs: 1 to 10000 (The placement of the decimal point follows the selection.)	
conT HEAT	**Direct/Reverse action** HEAT : Reverse (Heating) action cool : Direct (Cooling) action	

PRST 1 0.0	**OUT1 MV preset output** Setting range: 0.0 to 100.0% (Direct current output: -5.0 to 105.0%)	
PRST 2 0.0	**OUT2 MV preset output** Setting range: 0.0 to 100.0% (Direct current output: -5.0 to 105.0%)	

Event input group

Character	Setting Item, Setting Range	Data
E_EVI	**Event input group**	
EVT1 1 000	**Event input EVI1 allocation** Refer to Event Input Allocation Table.	
EVT1 2 000	**Event input EVI2 allocation** Refer to Event Input Allocation Table.	
EVT1 3 000	**Event input EVI3 allocation** Refer to Event Input Allocation Table.	
EVT1 4 000	**Event input EVI4 allocation** Refer to Event Input Allocation Table.	

Event Input Allocation Table

Selected value	Event input function	Input ON (Closed)	Input OFF (Open)	Remarks
000	No event			
001	Set value memory	2^n	1	n=0 to 3
002	Control ON/OFF	Control OFF	Control ON	Control output OFF function
003	Direct/Reverse action	Direct action	Reverse action	Always effective
004	Timer Start/Stop	Start	Stop	
005	PV Display; PV holding	Holding	Not holding	Ineffective when controlling
006	PV Display; PV peak value holding	Holding	Not holding	Ineffective when controlling
007	Preset output 1	Preset output	Standard control	If sensor is burnt out, the unit maintains control with the preset output MV.

Selected value	Event input function	Input ON (Closed)	Input OFF (Open)	Remarks
008	Auto/Manual control	Manual control	Automatic control	
009	Remote/Local	Remote	Local	Effective only when EA□ or EV□ option is ordered
010	Program mode; RUN/STOP	RUN	STOP	Level action when power is turned on
011	Program mode; Holding/Not holding	Holding	Not holding	Level action when power is turned on
012	Program mode; Advance function	Advance	Standard control	Level action when power is turned on
013	Integral action holding	Integral action Holding	Standard integral action	Control continues with the integral value being held.
014	Preset output 2	Preset output	Standard control	The unit maintains control with the preset output MV.

Event output group

Character	Setting Item, Setting Range	Data
E_EVo	**Event output group**	
EVTo1 000	**Event output EVT1 allocation** Refer to Event Output Allocation Table.	
EVTo2 000	**Event output EVT2 allocation** Refer to Event Output Allocation Table.	
EVTo3 000	**Event output EVT3 allocation** Refer to Event Output Allocation Table.	
EVTo4 000	**Event output EVT4 allocation** Refer to Event Output Allocation Table.	
EVTo5 000	**Event output EVT5 allocation** Refer to Event Output Allocation Table.	

Event Output Allocation Table

Selected value	Event output function	Proceeding to the lower level with the MODE key	Remarks
000	No event		
001	Alarm output; High limit alarm	Alarm hysteresis ↓ MODE Alarm delay time ↓ MODE Alarm Energized/De-energized	
002	Alarm output; Low limit alarm	Same as the High limit alarm	
003	Alarm output; High/Low limits	Same as the High limit alarm	
004	Alarm output; High/Low limits independent	Same as the High limit alarm	
005	Alarm output; High/Low limit range	Same as the High limit alarm	
006	Alarm output; High/Low limit range independent	Same as the High limit alarm	
007	Alarm output; Process high alarm	Same as the High limit alarm	
008	Alarm output; Process low alarm	Same as the High limit alarm	
009	Alarm output; High limit with standby	Same as the High limit alarm	
010	Alarm output; Low limit with standby	Same as the High limit alarm	
011	Alarm output; High/Low limits with standby	Same as the High limit alarm	
012	Alarm output; High/Low limits with standby independent	Same as the High limit alarm	
013	Timer output linked to “Timer Start/Stop” in [Event input allocation].	Timer output delay action ↓ MODE Timer output time unit ↓ MODE OFF delay time ↓ MODE ON delay time	Select “Timer Start/Stop” in [Event input allocation].
014	Timer output linked to “Timer Start/Stop” in [Event input allocation]. Control ON during timer operation. Control OFF after time is up.	Same as the above	Same as the above

Selected value	Event output function	Proceeding to the lower level with the MODE key	Remarks
015	Heater burnout alarm output	Heater rated current ↓ MODE Heater burnout alarm 1 value ↓ MODE Heater burnout alarm 2 value	Select the rated current 20 A or 100 A. (Can be set within the selected rated current.)
016	Loop break alarm output	Loop break alarm time ↓ MODE Loop break alarm band	
017	Time signal output	Time signal output step ↓ MODE Time signal output OFF time ↓ MODE Time signal output ON time	Time signal output is turned off when the performing step is complete.
018	Output during AT		Outputs during AT.
019	Pattern end output		Program control

Alarm output setting items (when 'Alarm output' is selected in [Event output allocation])

Character	Setting Item, Setting Range	Data
A1HYS 1.0	**Alarm hysteresis** Setting range: 0.1 to 1000.0℃ (℉) DC voltage, current inputs: 1 to 10000 (The placement of the decimal point follows the selection.)	
A1dLY 0	**Alarm delay time** 0 to 10000 seconds	
A1REV NoML	**Alarm Energized/De-energized** NoML : Energized REVS : De-energized	

If any alarm output from 001 (Alarm output; High limit alarm) to 012 (Alarm output; High/Low limits with standby independent) is selected in [Event output EVT2 to EVT5 allocation], their setting characters will be A2xxx to A5xxx.

Timer output setting items: When 'Timer output' is selected in [Event output allocation].

Character	Setting Item, Setting Range	Data
dLYF oN	**Timer output delay action** oN : ON delay time oFF : OFF delay time oNoFF : ON/OFF delay time	
TM_S MIN	**Timer output time unit** MIN : Minutes SEC : Seconds	
dYoFF 0	**OFF delay time** Setting range: 0 to 10000 (Time unit follows the selection in [Timer output time unit].)	
dYoN 0	**ON delay time** Setting range: 0 to 10000 (Time unit follows the selection in [Timer output time unit].)	

Heater burnout alarm output setting items: When ‘Heater burnout alarm output’ is selected in [Event output allocation].

Character	Setting Item, Setting Range	Data
H_HL 20.0A	**Heater rated current** 20.0A : 20.0 A 100.0A : 100.0 A	
H 0.0	**Heater burnout alarm 1 value** Rated current 20.0 A: 0.0 to 20.0 A, 100.0 A: 0.0 to 100.0 A	
H2 0.0	**Heater burnout alarm 2 value** Rated current 20.0 A: 0.0 to 20.0 A, 100.0 A: 0.0 to 100.0 A	

Loop break alarm setting items: When ‘Loop break alarm output’ is selected in [Event output allocation].

Character	Setting Item, Setting Range	Data
LP_T 0	**Loop break alarm time** 0 to 200 minutes	
LP_H 0	**Loop break alarm band** 0 to 150℃ (℉) or 0.0 to 150.0℃ (℉) DC voltage, current inputs: 0 to 1500 (The placement of the decimal point follows the selection.)	

Time signal output setting items: When ‘Time signal output’ is selected in [Event output allocation]

Character	Setting Item, Setting Range	Data
TS_No 1	**Time signal output step** Setting range: 1 to 15	
TS_oF 00.00	**Time signal output OFF time** Setting range: 00:00 to 99:59 (Time unit follows the selection in [Step time unit] in the Program group)	
TS_oN 00.00	**Time signal output ON time** Setting range: 00:00 to 99:59 (Time unit follows the selection in [Step time unit] in the Program group)	

Program group

Character	Setting Item, Setting Range	Data
E_PRo	**Program group**	
PRCMd FIX	**Fixed value control/Program control** FIX: Fixed value control PRoG: Program control	
M_S MIN	**Step time unit** MIN: Hours:Minutes SEc: Minutes:Seconds	
PRER StoP	**Power restore action** StoP: Stops (in standby) after power is restored coNT: Continues (resumes) after power is restored HoLd: Suspends (on hold) after power is restored	
S_SV 0	**Program start temperature** Setting range: Scaling low limit to Scaling high limit value	

Communication group

Character	Setting Item, Setting Range	Data
E_coM	**Communication group**	
cMSL NoML	**Communication protocol** NoML: Shinko protocol ModA: MODBUS ASCII mode ModR: MODBUS RTU mode	
cMNo 0	**Instrument number** Setting range: 0 to 95	
cMSP 96	**Communication speed** 96: 9600 bps 192: 19200 bps 384: 38400 bps	
cMFT 7EVN	**Data bit/Parity** 8NoN: 8 bits/No parity 7NoN: 7 bits/No parity 8EVN: 8 bits/Even 7EVN: 7 bits/Even 8odd: 8 bits/Odd 7odd: 7 bits/Odd	

Character	Setting Item, Setting Range	Data
StoP 1	**Stop bit** 1: 1 2: 2	
SV_b 0	**SVTC bias** Setting range: Converted value of ±20% of input span DC voltage, current inputs: ±20% of scaling span (The placement of the decimal point follows the selection.)	

External setting group

Character	Setting Item, Setting Range	Data
E_ExT	**External setting group**	
REMoT LocAL	**Remote/Local** LocAL: Local REMoT: Remote	
RTLH 1370	**External setting input high limit** Setting range: External setting input low limit to Input range high limit	
RTLL -200	**External setting input low limit** Setting range: Input range low limit to External setting input high limit	
RT_b 0	**Remote bias** Setting range: Converted value of ±20% of input span DC voltage, current inputs: ±20% of scaling span (The placement of the decimal point follows the selection.)	

Transmission Output Group

Character	Setting Item, Setting Range	Data
E_TRA	**Transmission output group**	
TRoS PV	**Transmission output type** PV: PV transmission SV: SV transmission MV: MV transmission dV: DV transmission	

Character	Setting Item, Setting Range	Data
TRLH 1370	**Transmission output high limit** PV, SV transmission: Transmission output low limit to Input range high limit value MV transmission: Transmission output low limit to 105.0% DV transmission: Transmission output low limit to Scaling span	
TRLL -200	**Transmission output low limit** PV, SV transmission: Input range low limit to Transmission output high limit value MV transmission: -5.0% to Transmission output high limit value DV transmission: -Scaling span to Transmission output high limit value	

Other function group

Character	Setting Item, Setting Range	Data
E_orH	**Other function group**	
Lock -----	**Set value lock** ----- (Unlock): All set values can be changed. Loc 1 (Lock 1): None of the set values can be changed. Loc2 (Lock 2): Only SV can be changed. Loc3 (Lock 3): None of the set values can be changed as Lock 1. Loc4 (Lock 4): SV and Alarm value can be changed. Other set values cannot be changed.	
PI dZN NoNE	**PID zone function** NoNE: Not used USE: Used	
RARU 0	**SV rise rate** Setting range: 0 to 10000 ℃/minute (℉/minute) Thermocouple, RTD inputs with a decimal point: 0.0 to 1000.0 ℃/minute (℉/minute) DC voltage, current inputs: 0 to 10000/minute (The placement of the decimal point follows the selection.)	
RARd 0	**SV fall rate** Setting range: 0 to 10000 ℃/minute (℉/minute) Thermocouple, RTD inputs with a decimal point: 0.0 to1000.0 ℃/minute (℉/minute) DC voltage, current inputs: 0 to 10000/minute (The placement of the decimal point follows the selection.)	

Character	Setting Item, Setting Range	Data
PSV oFF	**Indication when output OFF** oFF: OFF indication AoFF: No indication PV: PV indication PVAL: PV indication+ Any event output from EVT1 to EVT5	
bKLT ALL	**Backlight selection** ALL: All (Displays and indicators) are backlit. PV: PV Display is backlit. SV: SV/MV/TIME+MV/DV Bar Graph Displays are backlit. Ac: Action indicators are backlit. PVSV: PV+SV/MV/TIME+MV/DV Bar Graph Displays are backlit. PVAc: PV Display + Action indicators are backlit. SVAc: SV/MV/TIME+MV/DV Bar Graph Displays +Action indicators are backlit.	
coLR REd	**PV color** GRN: Green REd: Red oRG: Orange ALGR: When any alarm output from EVT1 to EVT5 is ON, PV color turns from green to red. ALoR: When any alarm output from EVT1 to EVT5 is ON, PV color turns from orange to red. PVGR: PV color changes continuously (Orange → Green → Red). APGR: PV color changes continuously (Orange → Green → Red), and simultaneously when any alarm output from EVT1 to EVT5 is ON (Red).	
cLRG 5.0	**PV color range** Setting range: 0.1 to 200.0℃ (℉) DC voltage, current inputs: 1 to 2000 (The placement of the decimal point follows the selection.)	
dPTM 0	**Backlight time** Setting range: 0 to 99 minutes	
bARSL MV	**Bar graph** MV: MV indication dV: DV indication NoNE: No indication	
dVWd 1	**Deviation unit** Setting range: 1 to Converted value of 20% of input span	

Program Pattern Table

Step number	1	2	3	4	5	6
Step SV						
Step time (　:　)						
Wait value						
EVT1 alarm value						
EVT1 high limit alarm value						
EVT2 alarm value						
EVT2 high limit alarm value						
EVT3 alarm value						
EVT3 high limit alarm value						
EVT4 alarm value						
EVT4 high limit alarm value						
EVT5 alarm value						
EVT5 high limit alarm value						
Time signal output ON						
OFF						

PID zone value	1	2	3	4	5
OUT1 proportional band					
OUT2 proportional band					
Integral time					
Derivative time					
ARW					
Manual reset					
OUT1 rate-of-change					

7	8	9	10	11	12	13	14	15

15. Operation Flowchart

Simplified setting and group selection are explained separately.
All setting items are used for the purpose of explanation, however some items will not be displayed depending on the specification.

15.1 Simplified Setting (SV, Event, PID Setting Modes: For Fixed Value Control Only)

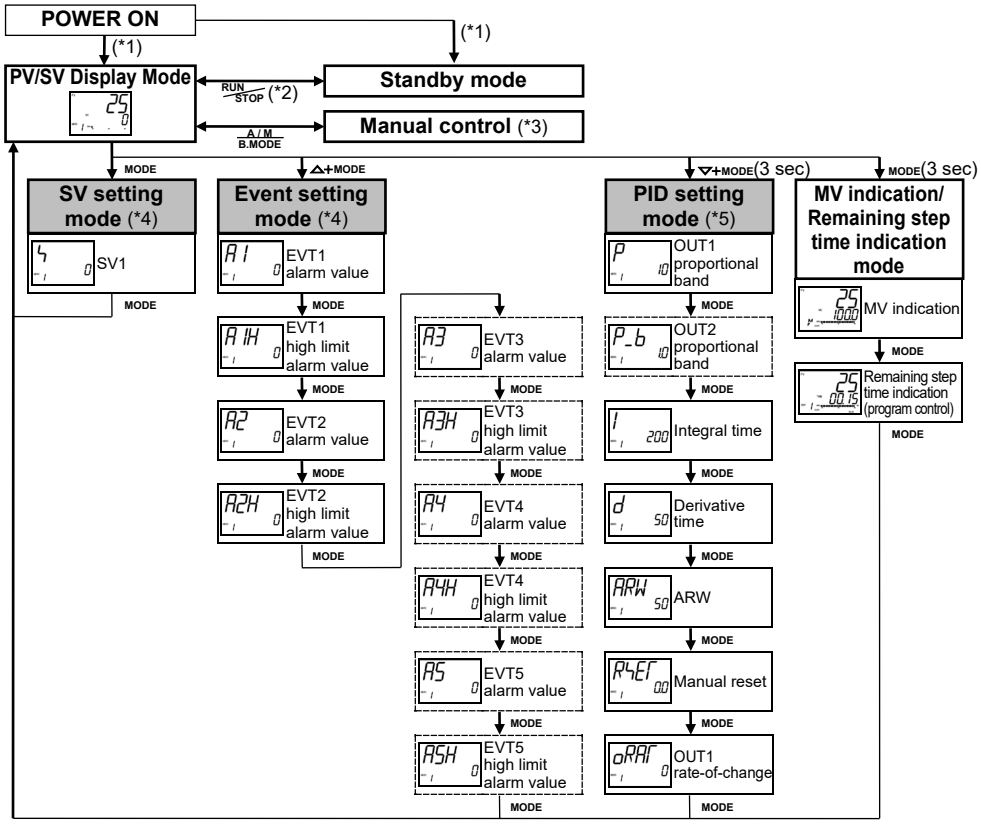

(*1) The unit starts from the power-off status.
(*2) For fixed value control, if this key is pressed for 1 second, the PV/SV Display Mode and standby mode can be switched.
(*3) If power is turned OFF during manual control, the unit starts from the PV/SV Display Mode.
(*4) If 'Set value memory' is selected in [Event input allocation], only setting items of the Set value memory number selected by connecting terminals can be set.
To select other memory numbers, connect relevant terminals again.
(*5) If PID zone function is set to "Used", settable PID zone parameters depend on the SV.

[Key operation]

- ↓ **MODE:** This means that if the **MODE** key is pressed, the unit proceeds to the next setting mode, illustrated by an arrow.
- △**+ MODE:** Press the △ and **MODE** keys (in that order) together.
- ▽**+ MODE** (3 sec): Press and hold the ▽ and **MODE** keys (in that order) together for 3 seconds.
- **MODE** (3 sec): Press and hold the **MODE** key for 3 seconds.

[Setting item]

- The PV Display indicates setting characters, and the SV/MV/TIME Display indicates the factory default.
- Setting items with dotted lines are optional, and they appear only when the corresponding option is ordered.

15.2 Group Selection (for Fixed Value Control)

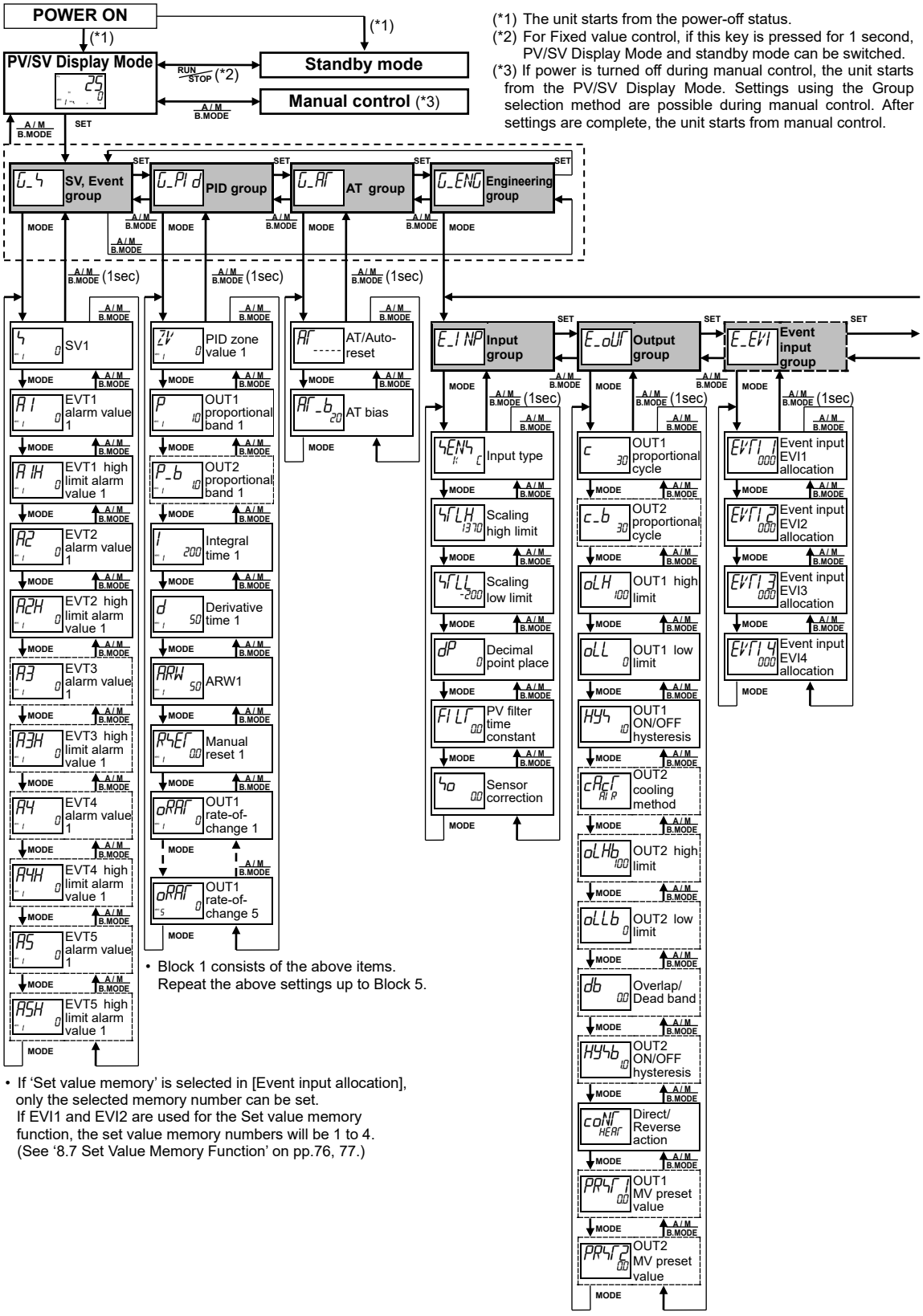

(*1) The unit starts from the power-off status.
(*2) For Fixed value control, if this key is pressed for 1 second, PV/SV Display Mode and standby mode can be switched.
(*3) If power is turned off during manual control, the unit starts from the PV/SV Display Mode. Settings using the Group selection method are possible during manual control. After settings are complete, the unit starts from manual control.

- Block 1 consists of the above items. Repeat the above settings up to Block 5.

- If 'Set value memory' is selected in [Event input allocation], only the selected memory number can be set. If EVI1 and EVI2 are used for the Set value memory function, the set value memory numbers will be 1 to 4. (See '8.7 Set Value Memory Function' on pp.76, 77.)

[Key operation]

- ↓**MODE**: This means that if the **MODE** key is pressed, the unit proceeds to the next setting mode, illustrated by an arrow.
- Pressing the A/M B.MODE key for 1 second reverts to the previous setting level.
- If the **MODE** key is pressed for 3 seconds at any group or setting item, the unit reverts to PV/SV Display Mode.

[Setting item]

- The PV Display indicates setting characters, and the SV/MV/TIME Display indicates the factory default.
- Setting items with dotted lines are optional, and they appear only when the corresponding option is ordered.

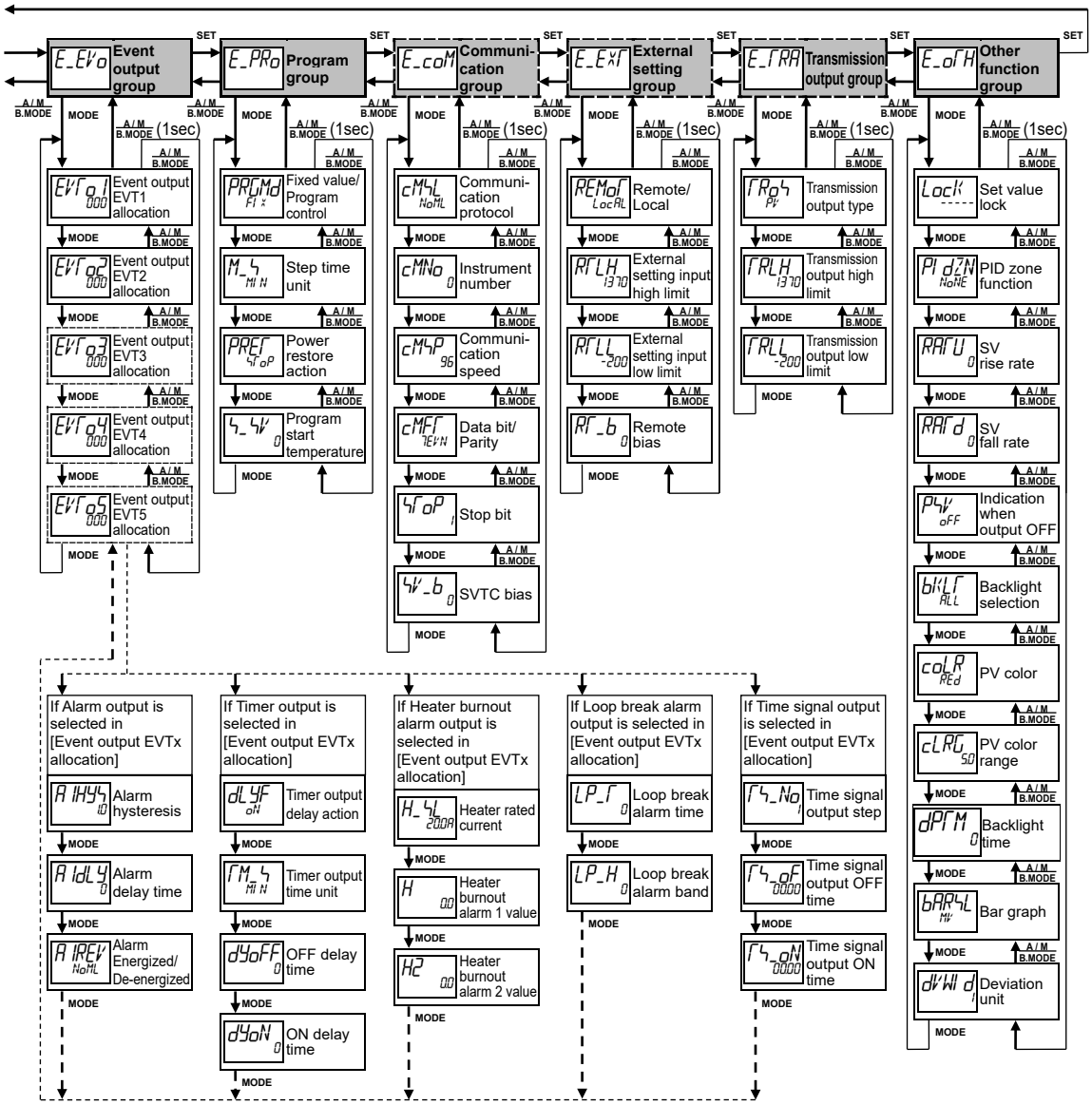

15.3 Group Selection (for Program Control)

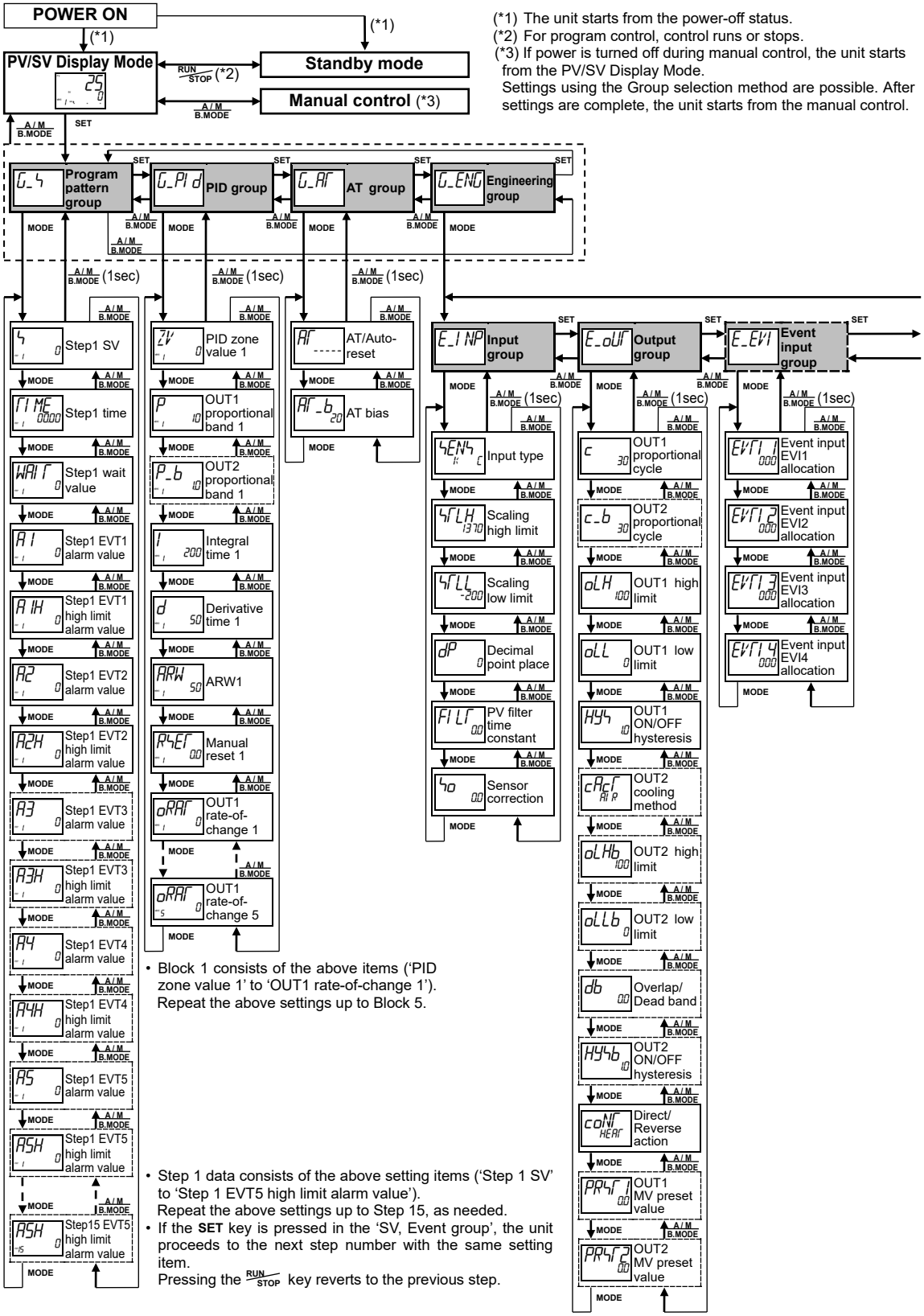

(*1) The unit starts from the power-off status.
(*2) For program control, control runs or stops.
(*3) If power is turned off during manual control, the unit starts from the PV/SV Display Mode.
Settings using the Group selection method are possible. After settings are complete, the unit starts from the manual control.

- Block 1 consists of the above items ('PID zone value 1' to 'OUT1 rate-of-change 1'). Repeat the above settings up to Block 5.

- Step 1 data consists of the above setting items ('Step 1 SV' to 'Step 1 EVT5 high limit alarm value'). Repeat the above settings up to Step 15, as needed.
- If the **SET** key is pressed in the 'SV, Event group', the unit proceeds to the next step number with the same setting item. Pressing the RUN/STOP key reverts to the previous step.

[Key operation]

- ↓**MODE:** This means that if the **MODE** key is pressed, the unit proceeds to the next setting mode, illustrated by an arrow.
- Pressing the A/M B.MODE key for 1 second reverts to the previous setting level.
- If the **MODE** key is pressed for 3 seconds at any group or setting item, the unit reverts to PV/SV Display Mode.

[Setting item]

- The PV Display indicates setting characters, and the SV/MV/TIME Display indicates the factory default.
- Setting items with dotted lines are optional, and they appear only when the corresponding option is ordered.

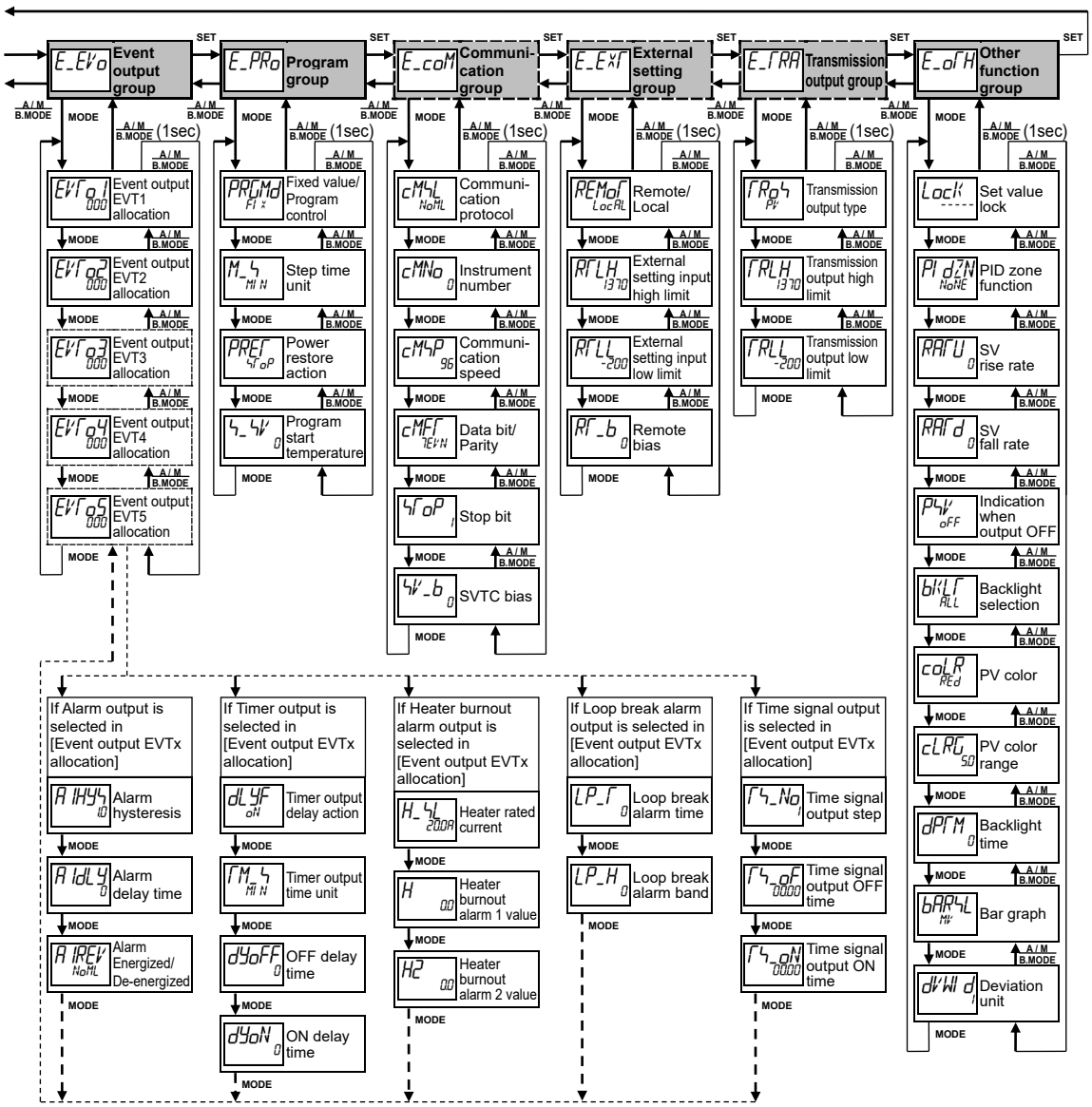

***** Inquiries *****

For any inquiries about this unit, please contact our agency or the vendor where you purchased the unit after checking the following.

[Example]

- Model ---------- ACD-13A-R/M
- Option ---------- A3, C5
- Serial number ---------- No. 123456789

In addition to the above, please let us know the details of the malfunction, or discrepancy, and the operating conditions.

SHINKO TECHNOS CO., LTD.

OVERSEAS DIVISION

Head Office : 2-5-1, Senbahigashi, Minoo, Osaka, Japan

URL: http://www.shinko-technos.co.jp/e/ Tel : +81-72-727-6100

E-mail: overseas@shinko-technos.co.jp Fax: +81-72-727-7006

No. ACDR11E10 2020.03