Control Module (4ch)

Model: **QTC1-4**

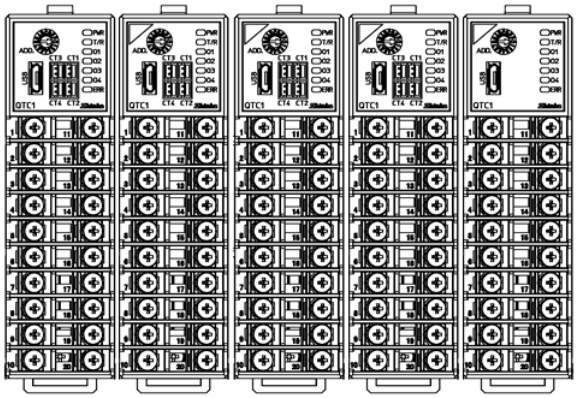

■ Model

(e.g.) QTC1 - 4 P T - R S A V M M A V - 2 2

Power supply / communication option:	Power supply / host communication function
Wiring method:	Terminal block type
CH1 control output:	Relay contact
CH2 control output:	Non-contact voltage (for driving SSR)
CH3 control output:	Direct current output, 4 to 20 mA DC
CH4 control output:	DC voltage output, 0 to 1 V DC
CH1 input:	Multi-range
CH2 input:	Multi-range
CH3 input:	Direct current input multi-range
CH4 input:	DC voltage input
Heater burnout alarm option:	4-point CT, 20 A
Event input/output option:	Event output (4 points)

QTC1 - 4	□	□	-□	□	□	□	□	□	□	□	-□	□	
Power supply / communication options	0												No options
	P												Power supply / host communication function
Wiring method		T											Terminal block type
CH1 control output			-□										See output code table
CH2 control output				□									
CH3 control output					□								
CH4 control output						□							
CH1 input							□						See input code table
CH2 input								□					
CH3 input									□				
CH4 input										□			
Heater burnout alarm options											-0		No options
											-2		4-point CT, 20 A (*1)
											-A		4-point CT, 100 A (*1)
Event input/output options												0	No options
												1	Event input (4 points) (*2)
												2	Event output (4 points) (*2)

(*1) CT and connector harness are sold separately.

(*2) Connector harness is sold separately.

Output Codes

Code	Output Type
R	Relay contact output
S	Non-contact voltage output (for driving SSR)
A	Direct current output, 4 to 20 mA DC
0	Direct current output, 0 to 20 mA DC
V	DC voltage output, 0 to 1 V DC
1	DC voltage output, 0 to 5 V DC
2	DC voltage output, 1 to 5 V DC
3	DC voltage output, 0 to 10 V DC
C	Open collector output
T	Triac output

Input Codes

Code	Input Type		Range
M	Thermocouple	K	-200 to 1370℃
		K	-200.0 to 400.0℃
		J	-200 to 1000℃
		R	0 to 1760℃
		S	0 to 1760℃
		B	0 to 1820℃
		E	-200 to 800℃
		T	-200.0 to 400.0℃
		N	-200 to 1300℃
		PL-Ⅱ	0 to 1390℃
		C	0 to 2315℃
		K	-328 to 2498℉
		K	-328.0 to 752.0℉
		J	-328 to 1832℉
		R	32 to 3200℉
		S	32 to 3200℉
		B	32 to 3308℉
		E	-328 to 1472℉
		T	-328.0 to 752.0℉
		N	-328 to 2372℉
		PL-Ⅱ	32 to 2534℉
		C	32 to 4199℉
	RTD	Pt100	-200.0 to 850.0℃
		Pt100	-328.0 to 1562.0℉
	DC voltage	0 to 1 V DC	-2000 to 10000
	Direct current	4 to 20 mA DC (Externally mounted shunt resistor)	-2000 to 10000
		0 to 20 mA DC (Externally mounted shunt resistor)	-2000 to 10000
A	Direct current	4 to 20 mA DC (Built-in shunt resistor)	-2000 to 10000
		0 to 20 mA DC (Built-in shunt resistor)	-2000 to 10000
V	DC voltage	0 to 5 V DC	-2000 to 10000
		1 to 5 V DC	-2000 to 10000
		0 to 10 V DC	-2000 to 10000

■ Accessories Sold Separately

Product Name	Model
50 Ω shunt resistor	RES-S01-050
Front terminal cover	TC-QTC
CT for 20 A	CTL-6-S-H (*1)
CT for 100 A	CTL-12-S36-10L1U (*1)
Heater burnout connector harness	WQ (*1)
Event input/output connector harness	EVQ (*2)

(*1) For heater burnout alarm (heater burnout alarm option symbols: -2, -A)

(*2) For event input or event output (event input/output option symbols: 1, 2)

■ Rating

Rated Scale

Input (TC)	Scale Range		Resolution
K	-200 to 1370℃	-328 to 2498℉	1℃(℉)
	-200.0 to 400.0℃	-328.0 to 752.0℉	0.1℃(℉)
J	-200 to 1000℃	-328 to 1832℉	1℃(℉)
R	0 to 1760℃	32 to 3200℉	1℃(℉)
S	0 to 1760℃	32 to 3200℉	1℃(℉)
B	0 to 1820℃	32 to 3308℉	1℃(℉)
E	-200 to 800℃	-328 to 1472℉	1℃(℉)
T	-200.0 to 400.0℃	-328.0 to 752.0℉	0.1℃(℉)
N	-200 to 1300℃	-328 to 2372℉	1℃(℉)
PL-Ⅱ	0 to 1390℃	32 to 2534℉	1℃(℉)
C	0 to 2315℃	32 to 4199℉	1℃(℉)

Input (RTD)	Scale Range		Resolution
Pt100	-200.0 to 850.0℃	-328.0 to 1562.0℉	0.1℃(℉)

Input (DC)	Scale Range	Resolution
4 to 20 mA	-2000 to 10000 (*)	1
0 to 20 mA		
0 to 1 V		
0 to 5 V		
1 to 5 V		
0 to 10 V		

(*) Scalable

Input

Thermocouple (TC)	K, J, R, S, B, E, T, N, C (JIS C1602-2015), PL-Ⅱ (ASTM E1751M-15) External resistance: 100 Ω or less (However, B input: 40 Ω or less)
RTD	Pt100, 3-wire type (JIS C1604-2013) Allowable input lead wire resistance: 10 Ω or less per wire
Direct current (mA DC)	0 to 20 mA DC, 4 to 20 mA DC Input impedance: 50 Ω (Shunt resistance) Allowable input current: 50 mA or less
DC voltage (V DC)	0 to 1 V DC Input impedance: 1 MΩ or more Allowable input voltage: 5 V DC or less Allowable signal source resistance:2 kΩ or less 0 to 5 V DC, 1 to 5 V DC, 0 to 10 V DC Input impedance: 100 kΩ or more Allowable input voltage: 15 V DC or less Allowable signal source resistance:100 Ω or less

■ Performance

Basic accuracy		At ambient temperature of 23℃ and mounting angle of ±5 degrees
	Thermocouple	Within ±0.2% of each input span However, below 0℃ (32℉): Within ±0.4% of each input span R, S inputs, 0 to 200℃ (32 to 392℉): Within ±6℃ (12℉) B input, 0 to 300℃ (32 to 572℉): Accuracy is not guaranteed.
	RTD	Within ±0.1% of each input span
	Direct current	Within ±0.2% of each input span
	DC voltage	Within ±0.2% of each input span
Cold junction temperature compensation accuracy		Within ±1℃ at -10 to 55℃
Effect of ambient temperature		Thermocouple input (no decimal point): Within ±100 ppm/℃ of each input span Below 0℃ (32℉): Within ±200 ppm%/℃ of each input span Thermocouple input (decimal point): Within ±200 ppm/℃ of each input span Below 0℃ (32℉): Within ±400 ppm%/℃ of each input span Other: Within ±100 ppm/℃ of each input span
Effects of electromagnetic interference		Within ±1% of each input span
Input sampling period		20 ms (with only DC voltage input and direct current input enabled) 50 ms (with only DC voltage input and direct current input enabled) 125 ms Note: Fixed to 125 ms regardless of settings for thermocouple input and RTD input

■ Control Performance

<table>
<tr><td colspan="2">Control action</td><td>Control method selectable from 2DOF PID control, Fast-PID control, Slow-PID control, ON-OFF control, or Gap-PID control. For optimal control, select the best control method according to the intended use and process.
(Factory default: 2DOF PID control)</td></tr>
<tr><td></td><td>2DOF PID control
Fast-PID control
Slow-PID control
Gap-PID control</td><td>2DOF PID control
A control method that offers both tracking characteristics with SV changes, and disturbance suppression. This method offers the same disturbance responsiveness as Fast-PID control as well as control actions with reduced overshooting.
Fast-PID control
This general PID control method is used for constant value control (SV control at a single value).
• P control: When integral time and derivative time are set to 0.
• PI control: When derivative time is set to 0.
• PD control: When integral time is set to 0.
• Deviation PID control: When the proportional gain 2DOF coefficient (α) is set to 1.00 and the derivative 2DOF coefficient (γ , Cd) is set to 1.00.
Slow-PID control
This control method is effective for processes where generating overshoot is not desired, and processes where the PV does not easily decrease after having exceeded the SV.
Gap-PID control
If the PV is noisy or if there is hysteresis in the operation unit, a slight fluctuation may be maintained near the deviation of 0. In such cases, a dead band is usually used, but since control is not performed within dead bands, the PV changes in the event of a disturbance. In this way, this control method ensures deviation characteristics in dead bands and allows for disturbance responses.
<table>
<tr><th>Item</th><th>Setting Range</th></tr>
<tr><td>Proportional band (P)</td><td>1 to Input span ℃ (℉) or 0.1 to Input span ℃ (℉)
Direct current input, DC voltage input: 0.10 to 100.00%</td></tr>
<tr><td>Integral time (I)</td><td>0 to 3600 sec or 0.0 to 2000.0 sec
1 to 3600 sec or 0.1 to 2000.0 sec (When Slow-PID control is selected)
The setting range varies depending on the selected integral/derivative decimal point position.</td></tr>
<tr><td>Derivative time (D)</td><td>0 to 3600 sec or 0.0 to 2000.0 sec
The setting range varies depending on the selected integral/derivative decimal point position.</td></tr>
<tr><td>Proportional gain 2DOF coefficient (α)</td><td>0.00 to 1.00</td></tr>
<tr><td>Integral 2DOF coefficient (β)</td><td>0.00 to 10.00</td></tr>
<tr><td>Derivative 2DOF coefficient (γ , Cd)</td><td>0.00 to 1.00</td></tr>
<tr><td>Proportional cycle</td><td>0.1 to 100.0 sec</td></tr>
<tr><td>Output high limit, output low limit</td><td>0.0 to 100.0%
Direct current output: -5.0 to 105.0%</td></tr>
<tr><td>Gap width (*)</td><td>0.0 to 10.0%
Proportional band × Gap width</td></tr>
<tr><td>Gap coefficient (*)</td><td>0.0 to 1.0</td></tr>
</table>
(*) With Gap-PID control only</td></tr>
<tr><td></td><td>ON–OFF control</td><td>Control method that operates with only two values: ON and OFF
<table>
<tr><th>Item</th><th>Setting Range</th></tr>
<tr><td>ON/OFF hysteresis</td><td>0.1 to 1000.0℃ (0.1 to 1800.0℉)
Direct current input, DC voltage input: 1 to 10000</td></tr>
</table></td></tr>
<tr><td colspan="2">Control range</td><td>Control output is turned OFF when the following control ranges are exceeded.
Thermocouple input (no decimal point)
Input range low limit value -50℃ (90℉) to Input range high limit +50℃ (90℉)
Thermocouple input (decimal point), RTD input
Input range low limit value - (Input span × 1%) ℃ (℉) to Input range high limit + 50.0℃ (90.0℉)
Direct current input, DC voltage input
Scaling low limit value - Scaling width × 1% to Scaling high limit value + Scaling width × 10%</td></tr>
</table>

Control output	Relay contact output:	1a
		Control capacity:3 A 250 V AC (resistive load)
		1 A 250 V AC (inductive load cosφ = 0.4)
		Electrical life: 100,000 cycles
		Minimum applicable load: 10 mA 5 V DC
	Non-contact voltage output	12 V DC ± 15%
	(for driving SSR)	Max. 40 mA (short circuit protected)
		* The power supply is not electrically insulated from the output.
	Direct current output	4 to 20 mA DC, 0 to 20 mA DC (Resolution: 12000)
		Load resistance: Maximum 550 Ω
		* The power supply is not electrically insulated from the output.
	DC voltage output:	0 to 1 V DC, 0 to 5 V DC, 1 to 5 V DC, 1 to 10 V DC (Resolution: 12000)
		Allowable load resistance: 1 kΩ or more
		* The power supply is not electrically insulated from the output.
	Open collector output (NPN):	Allowable load current: 100 mA or less
		Load voltage: 30 V DC or less
	Triac output:	Allowable load current: 0.5 A or less
	(AC output zero-cross method)	Load voltage: 75 to 250 V AC

■ General Structure

Weight		Approx. 170 g
Dimensions		30 × 100 × 85 mm (W × H × D) (excl. protrusions) Depth with terminal cover attached: 95 mm
Mounting method		DIN rail mounting
Case material, color		Case material: Flame-resistant resin, Color: Black
Panel		Membrane sheet
Standards (*)	EN	EN61010-1 (Pollution degree 2, Overvoltage category Ⅱ)
	EC (EMC directive)	EMI: EN61326 Electric-field strength of radiated disturbance: EN55011 Group 1, Class A Terminal noise voltage: EN55011 Group 1, Class A EMS: EN61326

(*) Triac output specifications are not applied to each standard.

■ Indication Structure / Settings Structure

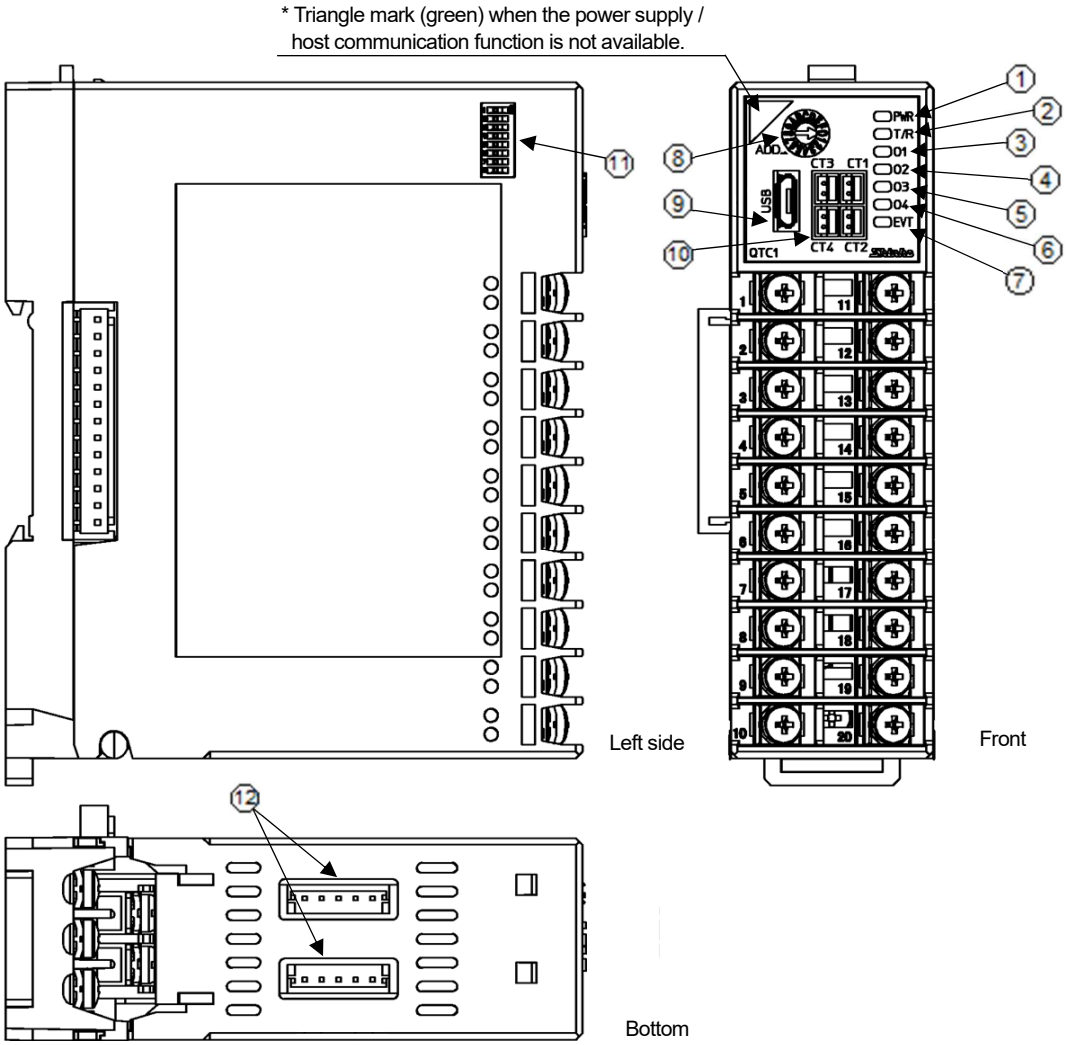

Action Indicator

No.	Symbol (color)	Name, Task	No.	Symbol (color)	Name, Task
①	PWR (green)	Power indicator Off: No power supplied to module On: Power supplied to module Flashing: Internal error during warm-up (Non-volatile memory, ADC input circuit)	③	O1 (green)	CH1 control output indicator
			④	O2 (green)	CH2 control output indicator
			⑤	O3 (green)	CH3 control output indicator
			⑥	O4 (green)	CH4 control output indicator
②	T/R (yellow)	Communication indicator Flashing: Normal communication, Communication error (reception error) Off: Communications error (no response), USB communication	⑦	EVT (red)	Event indicator Lights up when an alarm is activated, a loop break alarm is activated, or a heater burnout alarm (optional) is activated. Flashes in the event of a sensor error or overscale/underscale.

Switches, Connectors

No.		Symbol	Name, Task
⑧		ADD.	Rotary switch for module address selection Use the rotary switch to select the module address from 0 to F (1 to 16).
⑨		USB	Micro USB Type-B console communication connector
⑩ (*1)		CT1	CH1 CT input connector
		CT2	CH2 CT input connector
		CT3	CH3 CT input connector
		CT4	CH4 CT input connector
⑪			DIP switches for selecting communications specification Use the DIP switches for selecting the communication speed, data bit, parity, stop bit, and communication protocol.
⑫ (*2)			Event input/output connector

(*1) When using the heater burnout alarm option (heater burnout alarm option symbols: -2, -A)

(*2) When using the event input or event output option (event input/output option symbols: 1, 2)

■ Terminal Arrangement

QTC1 - 4PT - □□□□□□□□-□□

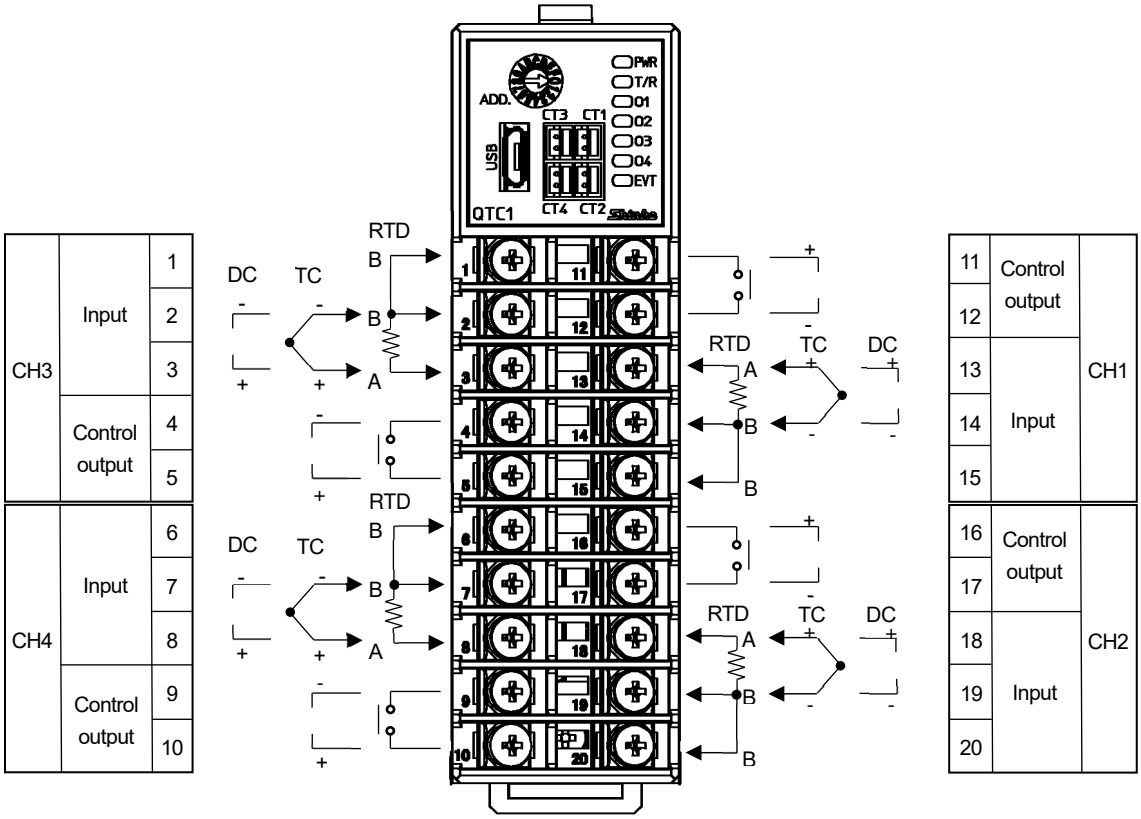

Front

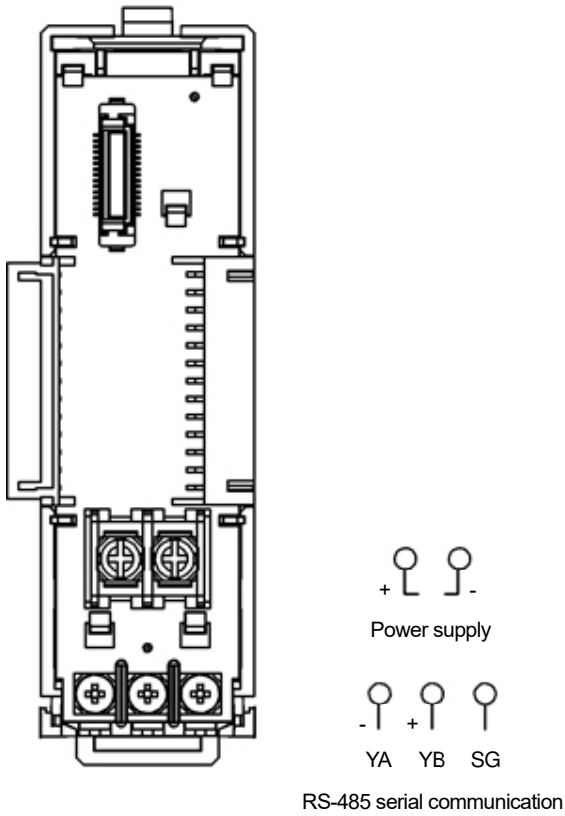

Base

■ Standard Functions

Alarm Output

Alarm types	12 alarm types: High limit alarm, Low limit alarm, High/Low limits alarm, High/Low limit range alarm, Process high alarm, Process low alarm, High limit with standby alarm, Low limit with standby alarm, High/Low limits with standby alarm, High/Low limits independent alarm, High/Low limit range independent alarm, High/Low limits with standby independent alarm. No alarm action can also be selected. (Factory default: No alarm action)
Action	ON/OFF action
Hysteresis	0.1 to 1000.0℃ (0.1 to 1800.0℉) (Factory default: 1.0℃ (1.8℉)) Direct current, DC voltage input: 1 to 10000 (Factory default: 10)
Output	Event output assigned by status flag or event output assignment selection
Alarm value 0 Enabled/Disabled	If "Enabled" is selected in [Alarm value 0 Enabled/Disabled], the following alarm type activates even if the alarm value is set to 0 (zero): High limit alarm, Low limit alarm, High/Low limits alarm, High/Low limit range alarm, High limit with standby alarm, Low limit with standby alarm, High/Low limits with standby alarm, High/Low limits independent alarm, High/Low limit range independent alarm, High/Low limits with standby independent alarm.

Loop Break Alarm

Setting range	Loop break alarm time:	0 to 200 minutes	
	Loop break alarm action span:	Thermocouple, RTD inputs:	0 to 150℃ (0 to 270℉) or 0.0 to 150.0℃ (0.0 to 270.0℉)
		Direct current, DC voltage input:	0 to 1500
Output	Event output assigned by status flag or event output assignment selection		

Set Value Ramp Function

When changing SV, this function enables control at the specified change rate between the previous SV and the changed SV rate. When control is enabled, control is performed at the specified change rate between the current PV and the SV.			
Setting range	SV rise rate:	Thermocouple, RTD inputs:	0 to 10000℃/minute (0 to 18000℉/minute) or 0.0 to 1000.0℃/minute (0.0 to 1800.0℉/minute)
		Direct current, DC voltage input:	0 to 10000/minute
	SV fall rate:	Thermocouple, RTD inputs:	0 to 10000℃/minute (0 to 18000℉/minute) or 0.0 to 1000.0℃/minute (0.0 to 1800.0℉/minute)
		Direct current, DC voltage input:	0 to 10000/minute
	The factory default for both the SV rise rate and SV fall rate is 0. However, when set to 0, this function is disabled.		

Power-On Return Action Selection

Select whether to return to a continued state (state before the power was turned off) or in the stopped state after the power is turned on.

Non-Volatile IC Memory Data Save Selection

Selecting whether to allow or prohibit saving data to the non-volatile IC memory is possible. If saving is prohibited, all setting values can be changed temporarily until the power is turned off and back on, at which time the values will return to the values applied before saving was prohibited.

Automatic/Manual Control Switching

Switching between automatic and manual control is possible through host communication.

Sensor Correction Coefficient

Setting the sensor input value slope is possible.	
Setting range	0.000 to 10.000 (Factory default: 1.000)

Sensor Correction

If the control location temperature and the sensor location temperature are different, shifting and correction of the PV is possible. (Valid within the rated input range regardless of the sensor correction value.)	
Setting range	Thermocouple, RTD inputs: -100.0 to 100.0℃ (-180.0 to 180.0℉) Direct current, DC voltage input: -1000 to 1000

Control Function Selection

Selecting between standard control, heating/cooling control, cascade control, or output selection function is possible.	
Cascade control	The master-side operation output amount obtained from the master-side SV and PV (CH1 or CH3; same applies below) is substituted for the slave-side SV (CH2 or CH4; same applies below), slave-side calculation is performed, and the slave-side control output is output. (With CH1 control output OFF (Current output: 0 mA))
Heating/cooling control	When heating/cooling control is selected as the control function for CH1, heating/cooling control is performed with CH1 as the heating side output and CH2 as the cooling side output. When heating/cooling control is selected as the control function for CH3, heating/cooling control is performed with CH3 as the heating side output and CH4 as the cooling side output. Heating/cooling control cannot be selected for CH2 and CH4.
Output selection function	When using the controller, if there is an unused input and an error occurs in the input channel currently being used, the input can be changed to an unused channel, and the output location for the input can be selected.

Extension Function Selection

Selecting between no extension and the auto-balance control function is possible.	
Auto-balance control function (For devices with power supply / host communication function)	This function controls the temperature of a controlled object at multiple control points to suppress partial burning and mechanical distortion. There are two auto-balance control types: using multiple control modules, or using independent control modules.

Output Gain/Bias Function

When multiple outputs are used for inputs, such as input-based heater controls at multiple outputs, if the output amount distribution is known in advance, this function enables uniform control by setting the ratio and bias for the reference output.

Input Calculation Function

Input calculation function selection can be used to select between standard input, difference input, and addition input. The calculation function selected for CH1 applies to CH1 and CH2, and the calculation function selected for CH3 applies to CH3 and CH4. However, the selection becomes invalid if a non-standard control function is selected.

Input Difference Detection Function

The input difference between the current input difference detection selection channel and the selected channel is detected, and if the value set in the input difference detection setting is exceeded, 1 is set as the input difference flag. However, if the current input difference detection selection channel is selected, this function is disabled.

■ Optional Functions

Heater Burnout Alarm (Heater burnout alarm option symbols: -2, -A)

This function cannot be added to current output type. The status can be determined by reading the status flag during serial communication.	
Rating	Single-phase: 20 A, Single-phase: 100 A (specified when ordering)
Setting range	20 A: 0.0 to 20.0 A (Off when set to 0.0) 100 A: 0.0 to 100.0 A (Off when set to 0.0)
Setting accuracy	±5% of rated value
Action point	Set value
Action	ON/OFF action
Output	Event output selected by status flag or event output assignment selection

Event Input (Event input/output option symbol: 1)

When an event input is input, the operations selected by the event input assignment selection are performed.	
Event input assignment selection	No action, Control start/stop (CH independent), Control start/stop (CH interlock)
No. of inputs	4
Input method	Voltage contact input sink method
Circuit current when closed	Approx. 6 mA
Reading judgment time	Approx. 100 ms

Event Output (Event input/output option symbol: 2)

The operations selected by the event output assignment selection are performed.	
Event output assignment selection	No action, EVT output (CH independent), EVT output (CH interlock)
No. of outputs	4
Circuit	NPN open collector
Maximum load voltage	30 V DC
Maximum load capacity	50 mA

Power Supply / Host Communication Function (Power supply/communication option symbol: P)

Communication line	EIA RS-485 compliant
Communication method	Half-duplex communication
Communication speed	Selecting 9600, 19200, 38400, or 57600 bps is possible using the DIP switches. (Factory default: 57600 bps)
Synchronization method	Start-stop synchronization
Data bit/parity	Data bits: 8 Parity: Selecting even, odd, or no parity is possible using the communication specification selection DIP switch. (Factory default: 8 bits / Even)
Stop bit	Selecting 1 or 2 is possible using the communication specification selection DIP switch. (Factory default: 1)
Response delay time setting	0 to 1000 ms (Factory default: 0 ms) The response from the module after receiving a command from the host can be delayed.
Data structure	

Communication protocol	MODBUS RTU
Start bit	1
Data bit	8
Parity	Enabled (even, odd), Disabled
Stop bit	1 or 2

Smart InterFace (SIF) Function (Program-less communication function)

This function enables a serial communication connection with Mitsubishi Electric MELSEC-Q series PLCs and writes/reads various data to/from the PLC register using the PLC communication protocol. The communication protocol uses QW and QR commands, and PLCs capable of using A-compatible 1C frame AnA/AnU common commands (QR/QW) are supported.

■ Insulation / Dielectric Resistance

Circuit Insulation Configuration

・Relay output, Open collector output, Triac output

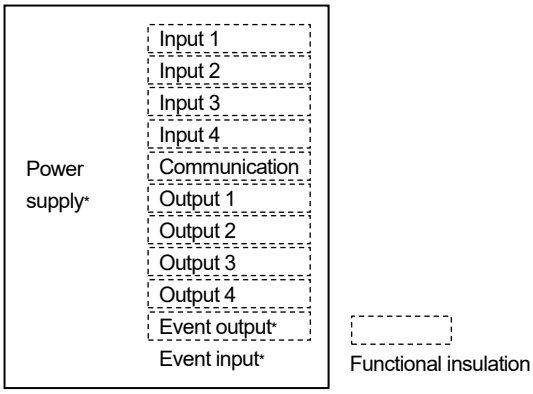

・Non-contact voltage output, Direct current output, DC voltage output

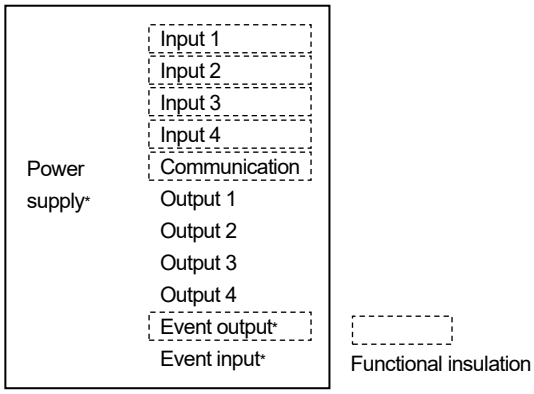

Insulation resistance	500 V DC, 10 MΩ or more
Dielectric resistance	Between input terminal and ground: 1.5 kV AC for 1 minute Between power terminal and ground: 1.5 kV AC for 1 minute Between power terminal and input terminal: 750 V AC for 1 minute

■ Environmental Conditions

Ambient temperature	-10 to 55℃ (Non-condensing, no icing)
Ambient humidity	35 to 85% RH (Non-condensing)
Environmental specifications	Compliant with revised RoHS Directive (RoHS2)

■ Attached Functions

Power failure countermeasures	Setting data is backed up to non-volatile IC memory.
Self-diagnosis	The watchdog timer monitors the CPU, and if an error occurs, all outputs are turned OFF and the instrument is initialized.
Automatic cold junction temperature Compensation	Detect the temperature at the connection terminal between the thermocouple and the instrument is detected and adjusted to be the same as if the reference contact were always at 0℃ (32℉). (Valid only for channels for which thermocouple input is selected)
PV filter time constant setting	A digital first-order low-pass filter is used to reduce PV fluctuations caused by noise.
Moving average count setting	Values that alter input values due to noise are averaged to stabilize the indicated values.
CH enable/disable selection	Enabled or disabled can be selected for each channel. When disabled, all operations for the selected channel are disabled, and PV becomes 0.
Overscale	A status flag is set when overscale is detected. However, control continues during overscale.
Underscale	A status flag is set when underscale is detected. However, control continues during underscale.
Sensor error	A status flag is set when a sensor error is detected, and control output is turned OFF.
Cold junction error	A cold junction error occurs when the internal cold junction temperature is below -10℃ (14℉) or above 55℃ (131℉). (Valid only for channels for which thermocouple input is selected)
ADC error	If there is an error such as a failure in an internal circuit, the control output of the channel where the error occurred is turned OFF. When this occurs, the PV is 32767.
Warm-up display	After the power is turned on, the power indicator flashes every 500 ms for about 3 seconds.
Cumulative contact open/close count measurement function	Cumulative measurement of the control output ON/OFF count is possible.
Cumulative energization time measurement function	Checking the cumulative energization time is possible.
Cumulative heater energization time measurement function	Checking the cumulative heater energization time is possible for relay output and SSR output.
Error history	In the event of an error, the bit ON/OFF status and energization time are saved. The 10 most recent errors are saved. Error history is available for each channel, and device common errors are saved in the all-channel error history. Error details: Alarm 1, Alarm 2, Alarm 3, Alarm 4, Heater burnout alarm, Loop break alarm, Sensor error, Input error (overscale), Input error (underscale), Cold junction error, Non-volatile IC memory error, ADC error
Console communication	Connect a communication cable (commercially available) to the console communication connector to perform operation from an external computer using the console software (SWC-QTC101M). Operations that can be performed: (1) Reading and configuration of SV, PID, and various other setting values (2) Reading of PV and operating statuses (3) Modification of functions Communication protocol: MODBUS RTU Communication cable: USB to Micro USB Type-B (Commercially available) Software: Console software (SWC-QTC101M)

■ Other

Power supply voltage	24 V DC Allowable fluctuation range: 20 to 28 V DC
Power consumption	Approx. 5 W or less
Rush current	Max. 10 A
Accessories included	Line cap (1), Power supply terminal cover (for devices with power supply / host communication function) (1), Instruction manual (excerpt) (1)
Accessories sold separately	Shunt resistor (50 Ω) (RES-S01-050), Front terminal cover (TC-QTC), CT for heater burnout alarm 20 A (CTL-6-S-H), CT for heater burnout alarm 100 A (CTL-12-S36-10L1U), Heater burnout connector harness (WQ), Event input/output connector harness (EVQ)
Instruction manual	Please download the full Instruction Manual and Communication Instruction Manual from the Shinko website. http://www.shinko-technos.co.jp/e/

■ Dimensions (Scale: mm)

Main Unit

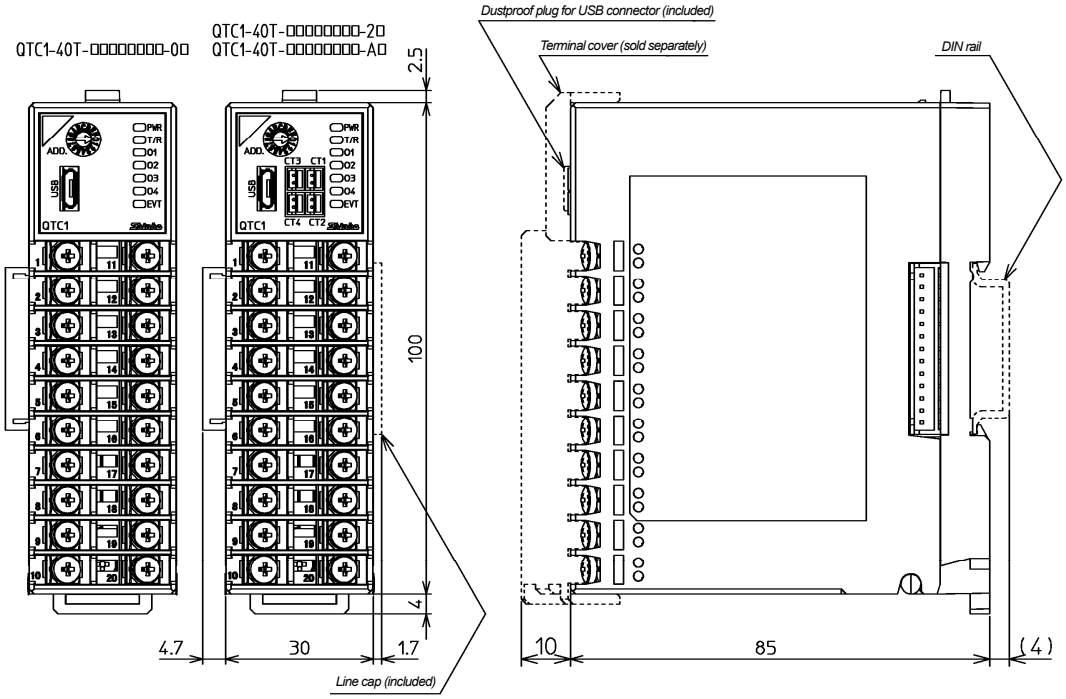

Accessories Sold Separately

Front terminal cover TC-QTC	Heater burnout alarm CT (current transformer)	
	CTL-6-S-H (for 20 A)	CTL-12-S36-10L1 (for 100 A)

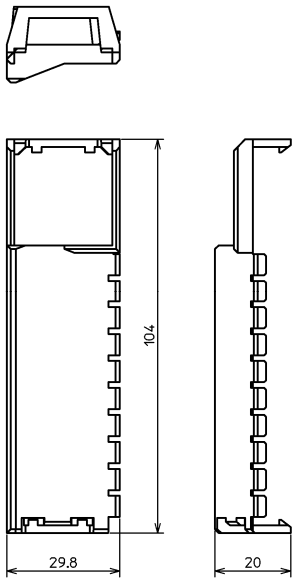

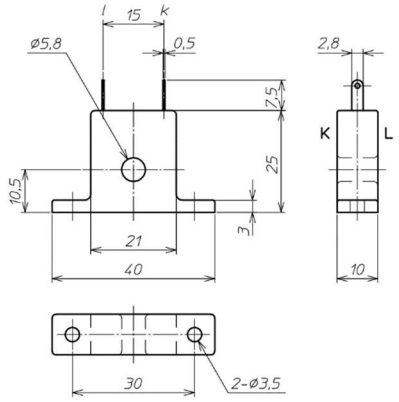

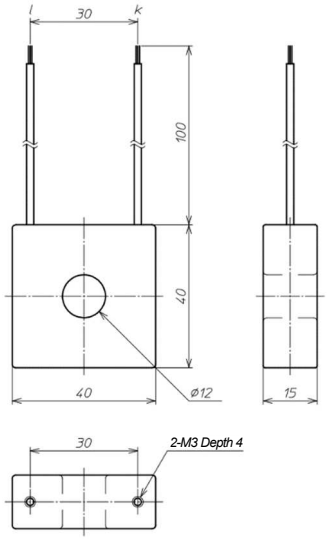

Shunt resistor: 50 Ω, RES-S01-050	Heater burnout connector harness WQ
	Event input/output connector harness EVQ

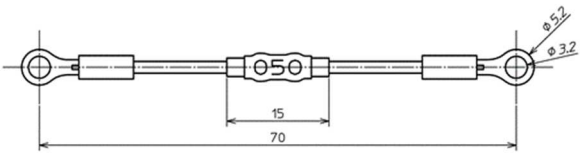

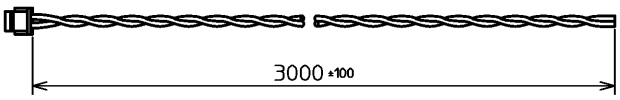

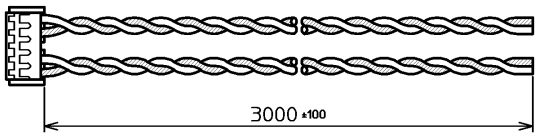

SHINKO TECHNOS CO., LTD. 2-5-1, Senbahigashi, Minoo, Osaka, 562-0035, Japan TEL: +81-72-727-6100 FAX: +81-72-727-7006
URL: http://www.shinko-technos.co.jp/e/ E-mail: overseas@shinko-technos.co.jp
20200703